Quick Start Guide

Fronius Primo GEN24 208-240
3.8 - 10.0 kW

https://manuals.fronius.com/html/4204260312

OPERATING INSTRUCTIONS



42,0410,2417 010-01022024



EN: WARNING!

This manual contains important instructions for the inverter that must be followed during installation and maintenance of the inverter. Changes or modifications to the equipment not expressly approved by the party responsible for compliance could void the user's authority to operate the equipment.

WARNING! Operating the equipment incorrectly or poor workmanship can cause serious injury or damage. The inverter may only be installed and commissioned by trained personnel acting in accordance with the technical regulations. Before working with the device, ensure that you have read and understand all the documents provided (both hard copies enclosed with the product and documents provided online). When solar modules are exposed to light, they supply voltage to the inverter. This document does not describe all of the possible system configurations.

FR: AVERTISSEMENT!

Les erreurs de commande et les erreurs en cours d'opération peuvent entraîner des dommages corporels et matériels graves. L'installation et la mise en service de l'onduleur ne doivent être effectuées que par du personnel formé à cet effet et dans le cadre des dispositions techniques. Ne travailler avec l'appareil que lorsque tous les documents mis à disposition en annexe, imprimés et en ligne, ont été lus et compris ! Les modules solaires exposés à la lumière fournissent la tension à l'onduleur. Ce document ne décrit pas toutes les possibilités de configurations système.

Le présent appareil est conforme aux CNR d'Industrie Canada applicables aux appareils radio exempts de licence. L'exploitation est autorisée aux deux conditions suivantes :

1) l'appareil ne doit pas produire de brouillage;

2) l'appareil doit accepter tout brouillage radioélectrique subi, même si le brouillage est susceptible d'en compromettre le fonctionnement.

ES: ¡ADVERTENCIA!

El manejo incorrecto y los trabajos realizados de forma incorrecta pueden provocar daños personales o materiales graves. La instalación y la puesta en marcha del inversor deben llevarse a cabo exclusivamente por personal formado y en el marco de las disposiciones técnicas. ¡Antes de trabajar con el equipo, leer y comprender todos los documentos adjuntos y puestos a disposición en línea! Los módulos solares expuestos a la luz envían tensión al inversor. Este documento no describe todas las configuraciones posibles del sistema.

La operación de este equipo está sujeta a las siguientes dos condiciones: (1) es posible que este equipo o dispositivo no cause interferencia perjudicial y (2) este equipo o dispositivo debe aceptar cualquier interferencia, incluyendo la que pueda causar su operación no deseada.

FCC

This equipment has been tested and found to comply with the limits for a Class B digital device, pursuant to part 15 of the FCC Rules. Operation is subject to the following two conditions:

(1) This device may not cause interference; and

(2) This device must accept any interference, including interference that may cause undesired operation of the device.

Rapid Shutdown

Two different types of rapid shutdown (RSD) can be triggered depending on the configuration and on-site installation:

Via external buttons: One or more external buttons can be installed on the WSD (wired shutdown) interface of the Data communication area on page (→). Pressing one of these buttons triggers the rapid shutdown. The terminals are discharged to < 30 VDC / 8 A / 240 VA and < 15 VAC / 8 A / 240 VA. The inverter also interrupts the communication to the shutdown devices of the PV modules if they correspond to the SunSpec standard for rapid shutdown.

Via the loss of the grid connection: An automatic rapid shutdown can also occur if the grid connection is lost. The inverter identifies a failure of the grid connection and terminals are discharged to < 30 VDC / 8 A / 240 VA and < 15 VAC / 8 A / 240 VA. The inverter also interrupts the communication to the shutdown devices of the PV modules if they correspond to the SunSpec standard for rapid shutdown.

For more information see

Power Line Communication (PLC) transmitter

The inverter is equipped with a Power Line Communication (PLC) transmitter on the DC side.

Its function is to ensure rapid shutdown in accordance with US safety standard NEC 2017 Art. 690.12. The PLC is implemented according to the specification "Communication Signal for Rapid Shutdown – SunSpec Interoperability Specification". Please visit www.sunspec.org for details.

AFCI - Arc Fault Circuit Interrupter (Arc Guard)

An AFCI (arc fault circuit interrupter) protects against arc faults and, in the narrower sense, is a protection device in the event of contact errors. The AFCI evaluates faults that occur in the current and voltage flow on the DC side using an electronic circuit and shuts down the circuit if a contact error is detected. This prevents overheating at poor contact points and, ideally, possible fires.

⚠ DANGER

Danger from faulty or incorrect DC installation.
This may result in a risk of damage and, as a consequence, risk of fire in the PV system due to prohibited thermal loads that occur during an arc.

- ► Check the plug connections to ensure that they are correct.
- ► Repair faulty insulation correctly.
- ► Perform connection work in line with the instructions.

For status codes see

Detailed, country-specific warranty terms are available on: www.fronius.com/solar/warranty

Suitable grids

240 V: 120 V Split Phase
240 V: 120 V Stinger

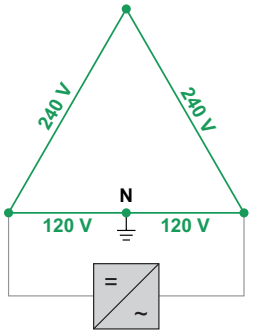

[1] **208 V / 120 V** WYE
[2] **220 V / 127 V** WYE

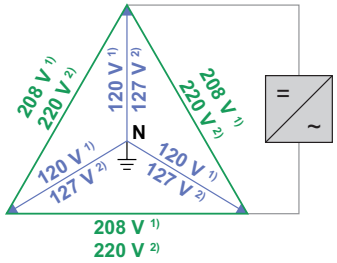

[1] **208 V** Delta Corner Grounded
[2] **220 V** Delta Corner Grounded
[3] **240 V** Delta Corner Grounded

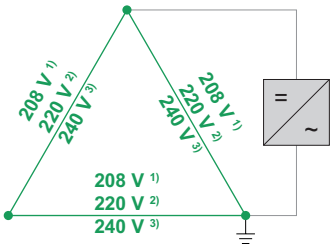

Warning signs explanation



General warning sign



Electricity hazard



Hot surface

Tools

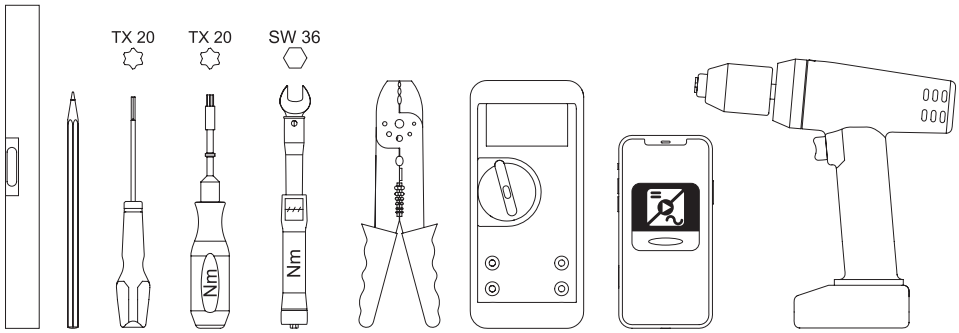

To note during installation



DC Voltage

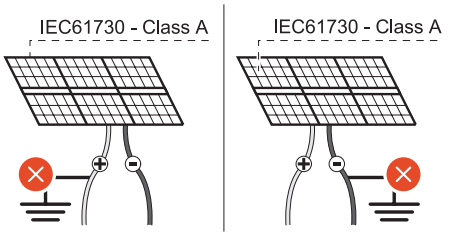

max. 600 V_{DC}

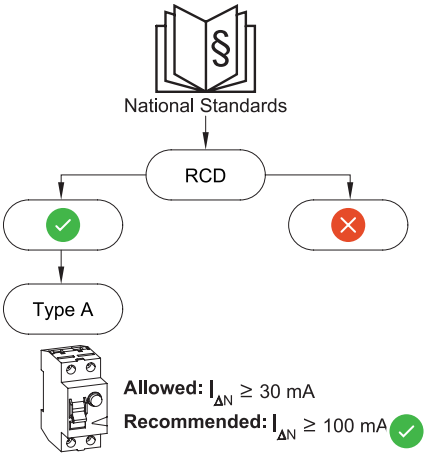

Rating plate

Safety information

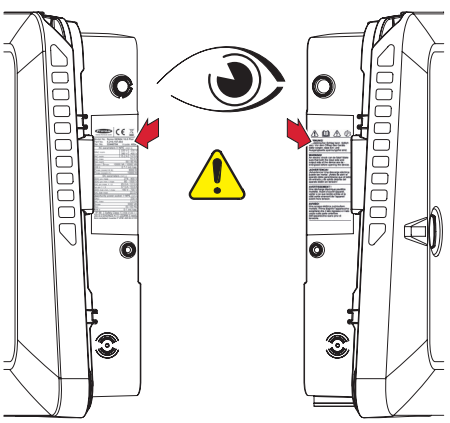

Mounting conditions

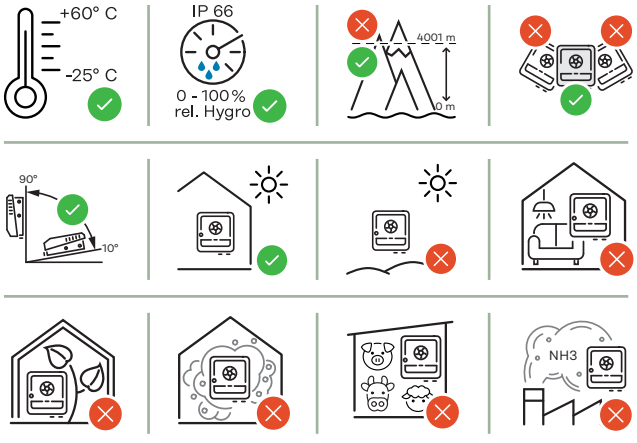

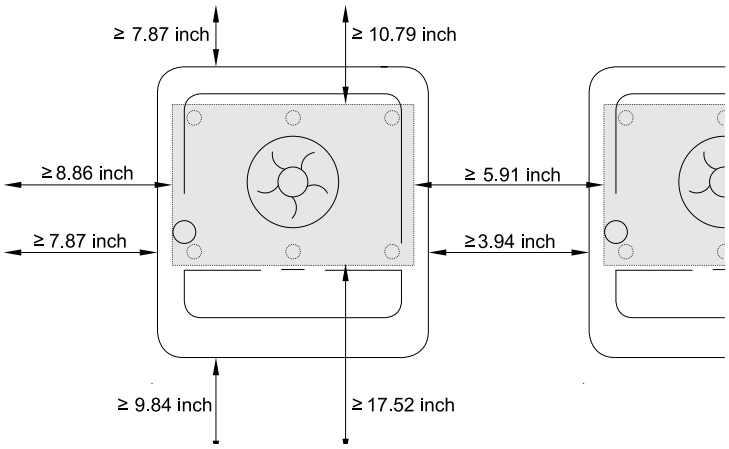

Mounting

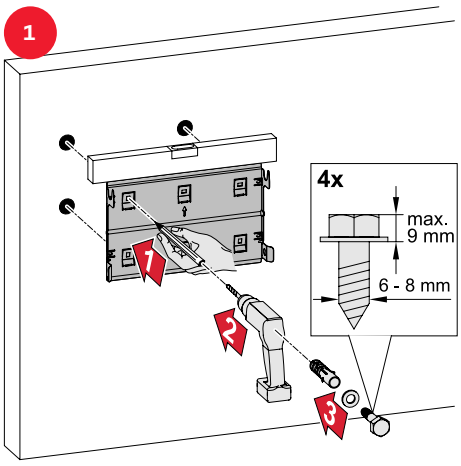

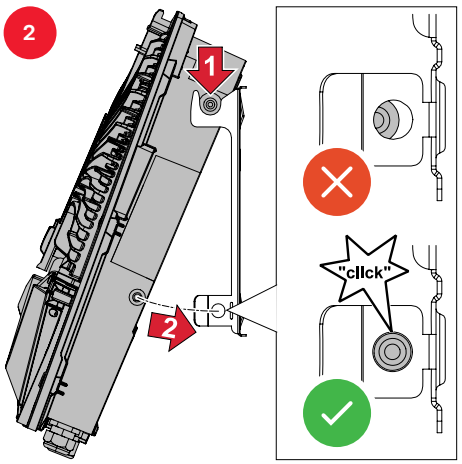

AC~

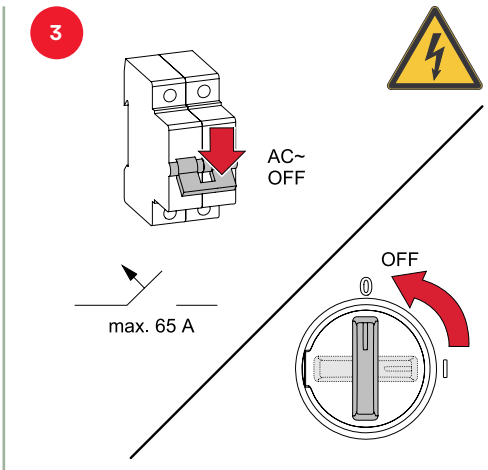

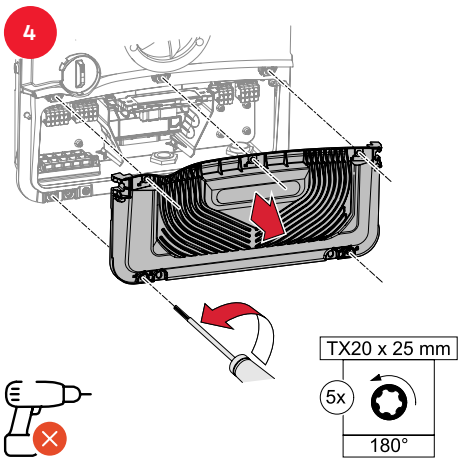

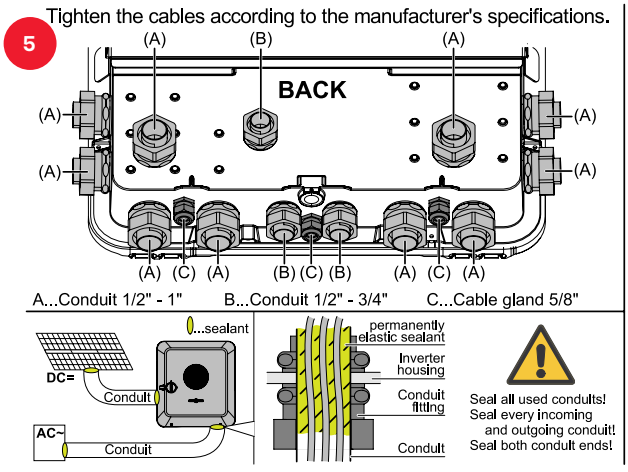

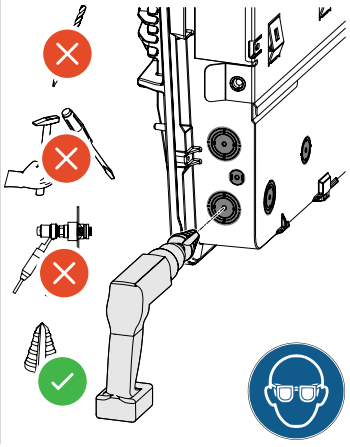

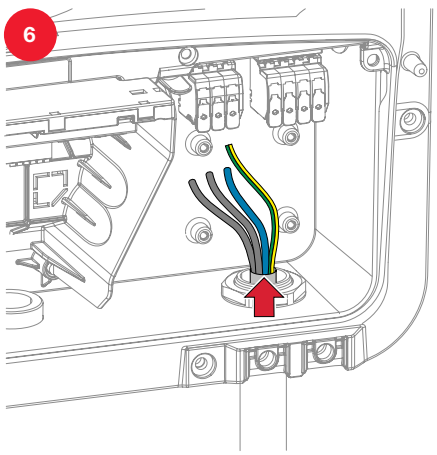

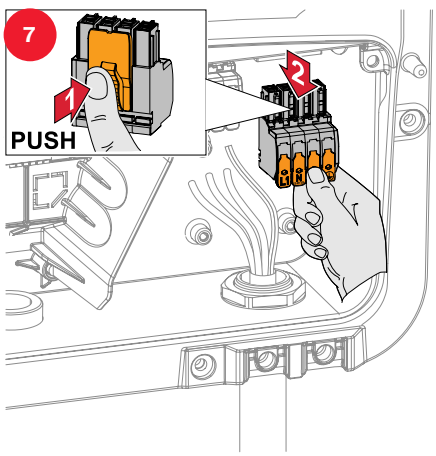

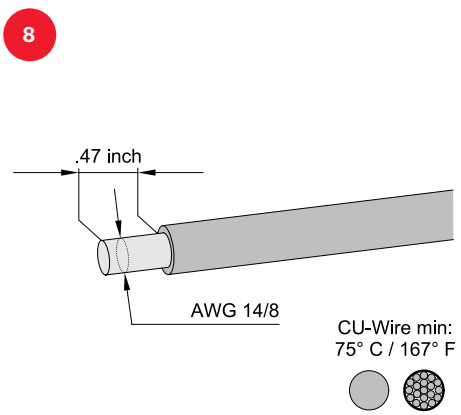

9

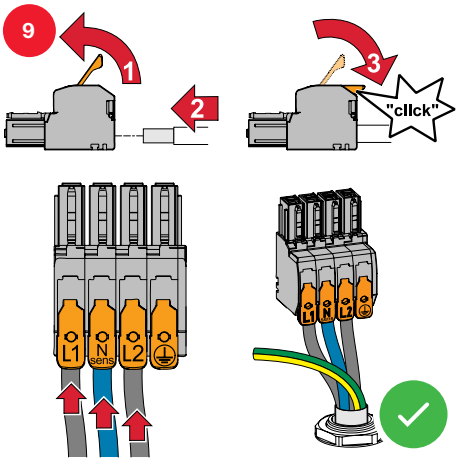

10

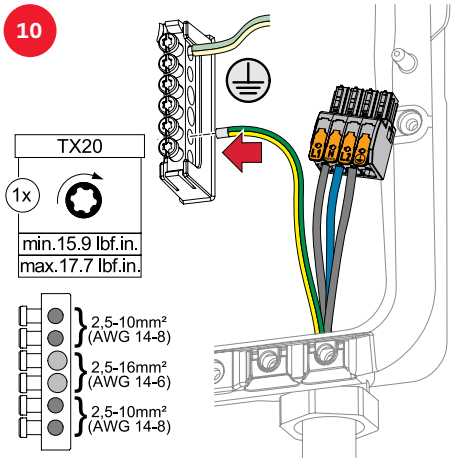

11

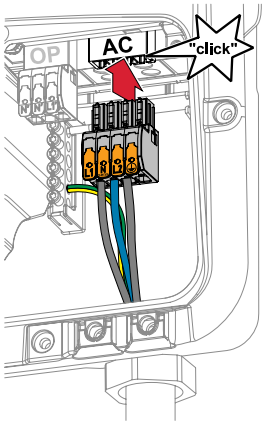

DC=

12

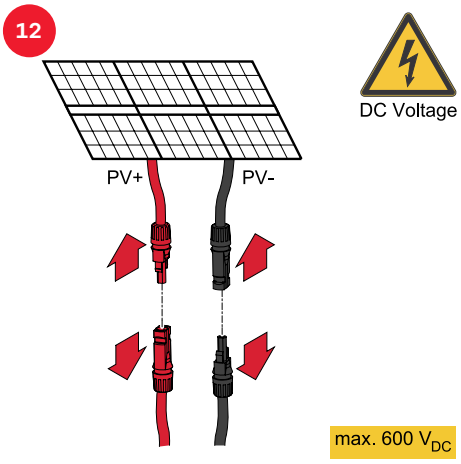

13

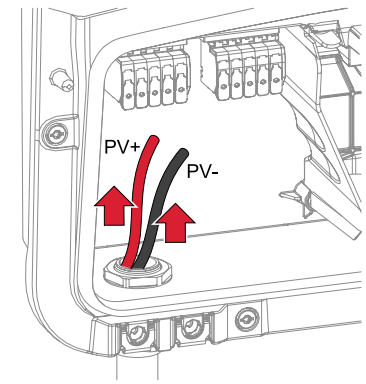

14

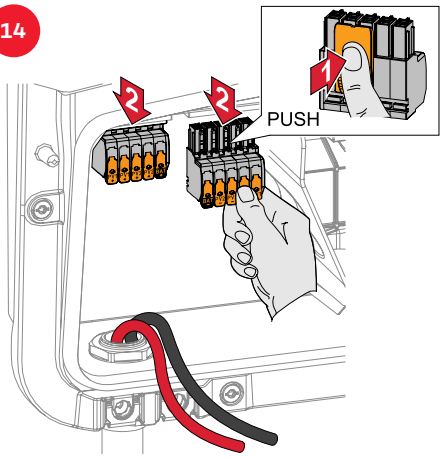

15

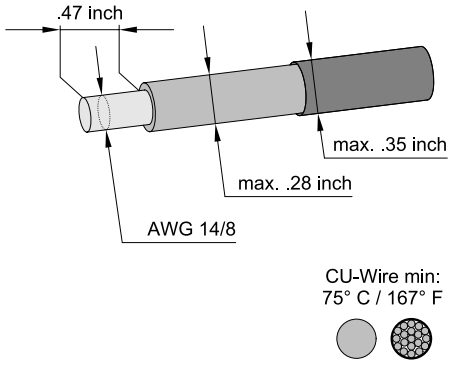

16

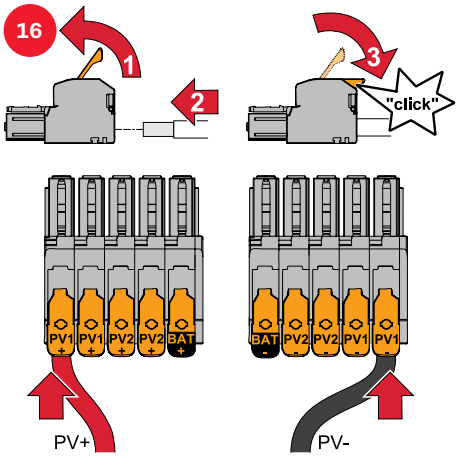

17

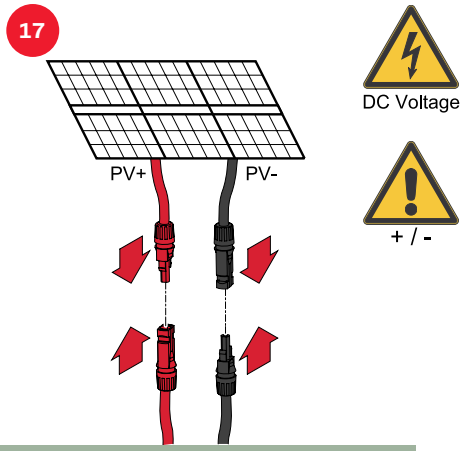

Data communication (optional)

18

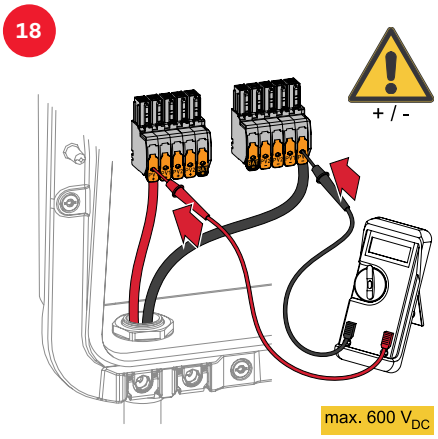

19

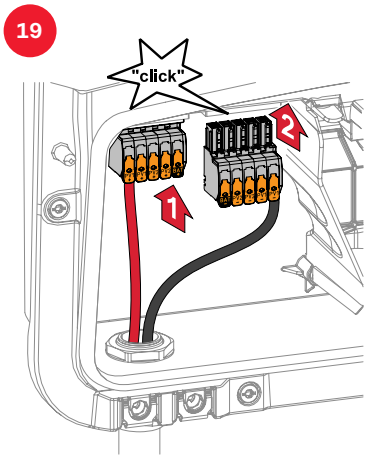

20

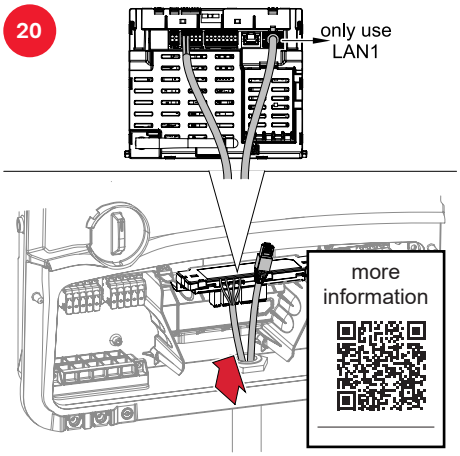

Commissioning

21

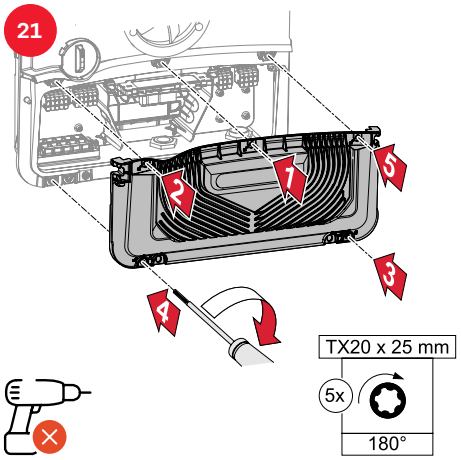

22

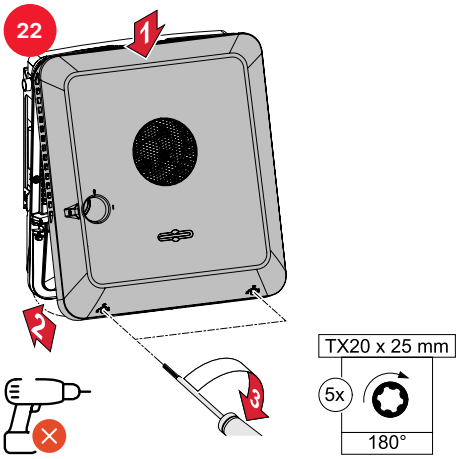

23

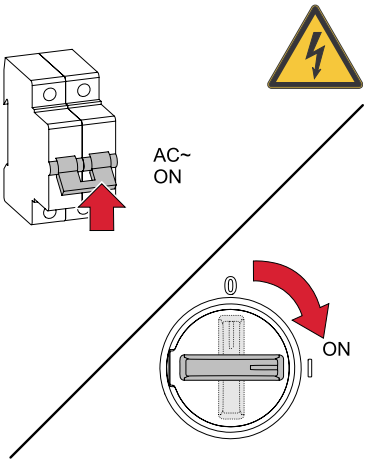

Control panel

24

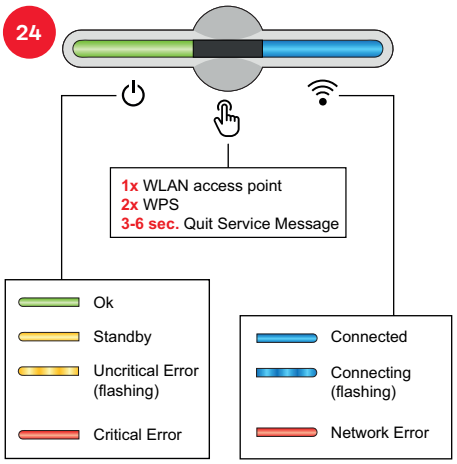

Setup with mobile phone

25a

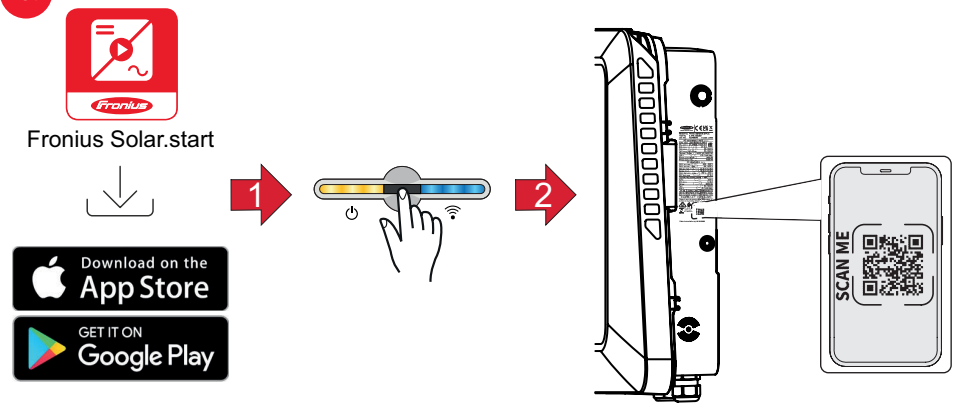

Setup with PC - Ethernet

25b

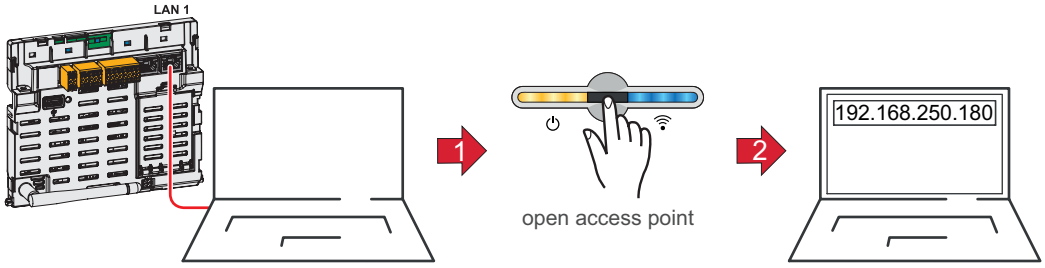

Setup with PC - WLAN

25c

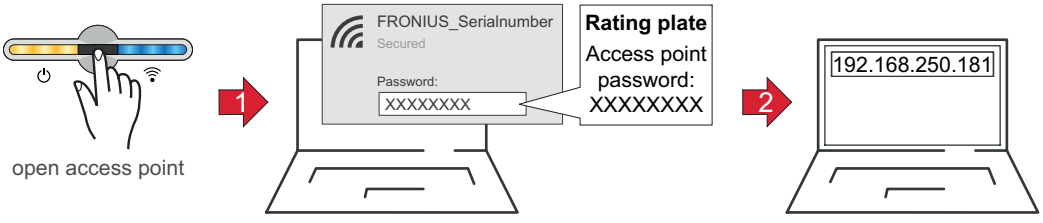

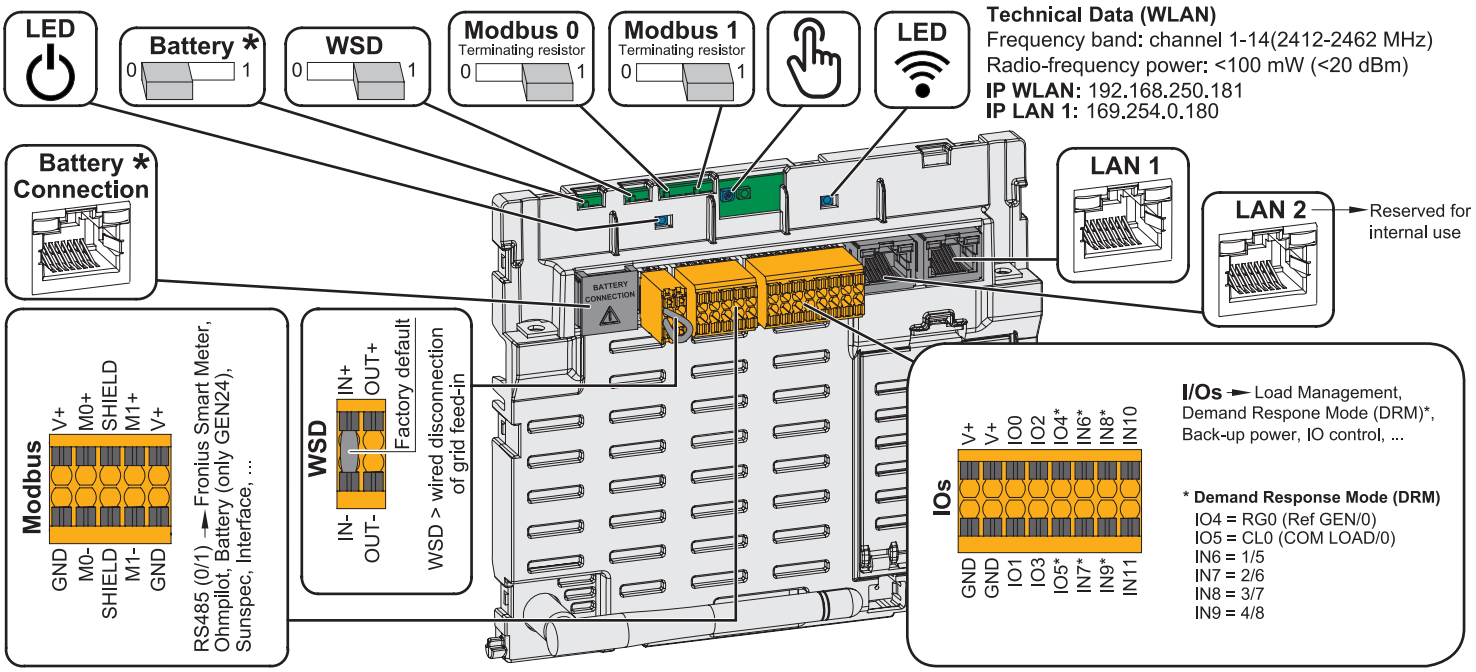

* Please note that the BAT (RJ45) interface is reserved for future use and not given at the moment.

Fronius Primo GEN24 3.8 - 6.0 kW 208 - 240	
Dimensions (height x width x depth)	20.3 x 18.7 x 6.5 inch
Max. short-circuit current (I_{sc} PV = I_{sc} max)	36 A (MPPT1) / 19 A (MPPT2)

Fronius Primo GEN24 7.7 - 10.0 kW 208 - 240	
Dimensions (height x width x depth)	23.0 x 20.8 x 7.1 inch
Max. short-circuit current (I_{sc} PV = I_{sc} max)	41.25 A (MPPT1) / 36 A (MPPT2)



fronius.com/en/solar-energy/installers-partners/products-solutions/monitoring-digital-tools

MONITORING & DIGITAL TOOLS

Fronius International GmbH
Froniusstraße 1
4643 Pettenbach
Austria
contact@fronius.com
www.fronius.com

Under www.fronius.com/contact you will find the adresses of all Fronius Sales & Service Partners and locations.