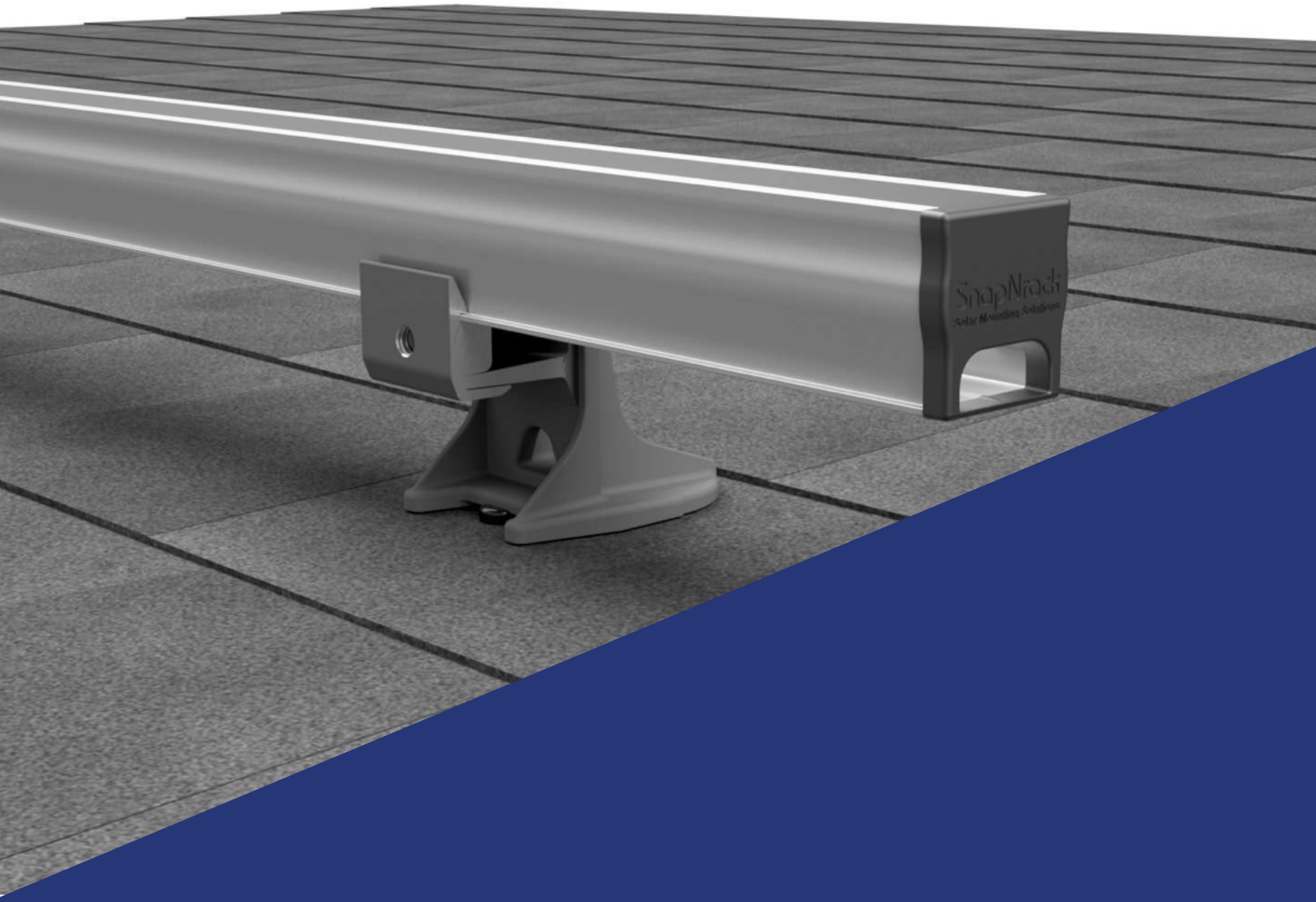

SnapNrack™

Solar Mounting Solutions

Ultra Rail

Residential Roof Mount System
Installation Manual

snapnrack.com

2703 Listed — PV Mounting System

An Intro to SnapNrack Ultra Rail

SnapNrack Ultra Rail Solar Mounting System offers a low profile, visually appealing, photovoltaic (PV) module installation system. This innovative system simplifies the process of installing solar PV modules, shortens installation times, and lowers installation costs..

SnapNrack systems, when installed in accordance with this manual, will be structurally adequate for the specific installation site and will meet the local and International Building Code. Systems will also be bonded to ground, under SnapNrack's UL 2703 Listing.

The SnapNrack installation system is a set of engineered components that can be assembled into a wide variety of solar mounting structures. It is designed to be installed by qualified solar installation technicians. With SnapNrack you will be able to solve virtually any PV module mounting challenge.

Benefits of Installing the SnapNrack Ultra Rail System

Install With Existing Roof Attachments

Compatible with existing SnapNrack roof attachments

Install With Very Few Tools

All Ultra Rail hardware is attached using a standard 1/2" socket

Built in Wire Management and Aesthetics

Extensive wire management solutions have been designed specifically for the system that adapts to multiple possible mounting positions.

The system is designed to be aesthetically pleasing on its own, so it does not require an aesthetic skirt. SnapNrack does offer an optional skirt for those looking for a high end look to the system.

Table of Contents

Step 1: Project Plans

Certification Details 4

Component Details 5

Pre-Installation Requirements 10

Step 2: Roof Attachment

Umbrella L Foot Mount 14

SpeedSeal™ Foot. 16

UltraFoot, Rafter 18

UltraFoot, Deck 20

UltraFoot, Anchor 22

Tile Roof Hook F 25

Tile Roof Hook WS 27

Adjustable Tile Hook 29

Metal Roof Base 32

Seam Clamp 34

S-5! Metal Roof Solutions 36

Ultra Rail Mounting Hardware 48

Fixed Tilt Mounts 50

Step 3: Rail Installation

Installing and Leveling Rails 54

Leveling Components 56

UR-40 & UR-45 Rail Splice 57

UR-60 Rail Splice 58

Step 4: Module Installation

Module Installation 59

Rail Finishing 64

Step 5: Selecting Racking Accessories

Wire Management 66

Module Level Power Electronics (MLPE) Installation. 69

Grounding Specifications 73

List of Approved Modules. 78

List of Approved MLPE Devices. 86

Mechanical Loading Specifications 87

Certification Details

SnapNrack Ultra Rail system has been evaluated by Underwriters Laboratories (UL) and Listed to UL/ANSI Standard 2703 for Grounding/Bonding, Mechanical Loading, and Fire Classification.

Grounding/Bonding

The Ultra Rail system has been designed in compliance with UL Standard 2703 Section 9.1 Exception, which permits accessible components that **are not part** of the fault current ground path to **not be electrically bonded** to the mounting system (e.g. roof attachments, array skirt, etc.). For more details on the integrated grounding functionality see the Grounding Specifications section.

This racking system may be used to ground and/or mount a PV module complying with UL 1703 only when the specific module has been evaluated for grounding and/or mounting in compliance with the included instructions. See the Grounding Specifications for the list of modules tested with the Ultra Rail system for integrated grounding.

Ground Lugs have been evaluated to both UL 467 and UL 2703 Listing requirements.

Ultra Rail has been listed with a number of Module Level Power Electronic (MLPE) devices. A complete list can be found in the Grounding Specifications section.

The mounting system Bonding Listing is only valid when installed with a Non-Separately Derived PV system. The PV system is required to have a direct electrical connection to another source, such as connecting to the grid via a grid interactive inverter.

SnapNrack recommends that bare copper never come into contact with aluminum.

Mechanical Loading

The Ultra Rail system is Listed for mechanical loading for different load ratings depending on the mounting configuration and PV module installed. For more details on the mechanical loading details see the Mechanical Loading Specifications section.

SnapNrack engineered systems should only be used with SnapNrack components and hardware. Any application outside of those specified in this Installation Manual and the Structural Engineering Report may void the warranty and structural certification could become invalid.

If the module clamps have been engaged and need to be loosened and reengaged, SnapNrack recommends moving the module frame 3mm to engage the bonding pin in a new location.

The UL Listing covers mechanical load ratings for the various span lengths, module orientations and positive, negative, and side load ratings. These values can be found in the Mechanical Loading Specifications section.

SnapNrack recommends a periodic re-inspection of the completed installation for loose components, loose fasteners, and any corrosion, such that if found, the affected components are to be immediately replaced.

Fire

The Ultra Rail system has been evaluated for a Class A System Fire Classification for a Steep-Sloped Roof (≥ 2:12 pitch) using Type 1 and Type 2 modules. In order to maintain the System Classification, modules are clamped to the mounting rails between 0 and 12 inches from the top and bottom edges of the module.

The Ultra Rail system has been evaluated for a Class A System Fire Classification for a Low-Sloped Roof (< 2:12 pitch) using Type 1 and Type 2 modules. In order to maintain the System Classification, modules are clamped to the mounting rails between 0 and 16.3 inches from the top and bottom edges of the module.

The optional Array Skirt accessory has also been evaluated and the Ultra Rail system will maintain the Class A System Fire Classification detailed above if installed with the Skirt.

Because the system was tested at 5 inches above the test roof fixture Ultra Rail can be installed without any height restrictions and will maintain the Class A System Fire Classification. See Rail Installation section for potential module-specific height restrictions due to module temperature.

Component Details

Structural Components

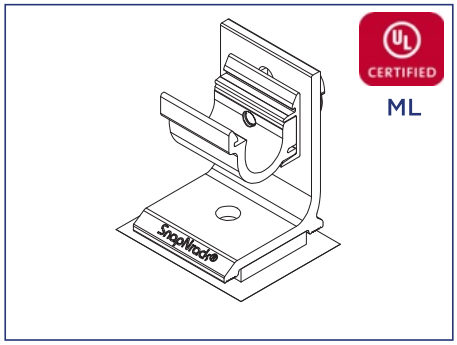

UltraFoot, Rafter Roof Attachment

Roof attachment kit for composition shingle roofs including chemically flashed L foot and hardware

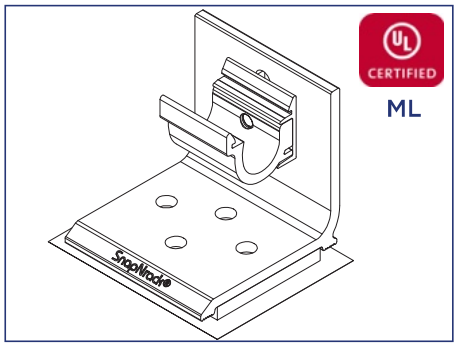

UltraFoot, Deck Roof Attachment

Roof attachment kit for composition shingle roofs including chemically flashed L foot and hardware

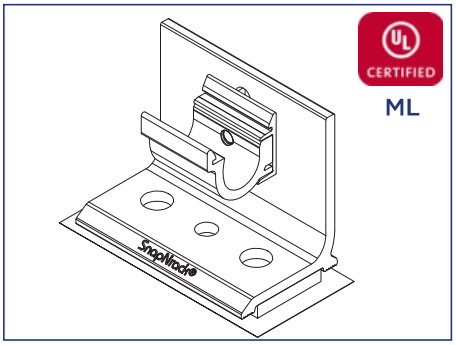

UltraFoot, Anchor Roof Attachment

Roof attachment kit for composition shingle roofs including chemically flashed L foot and hardware

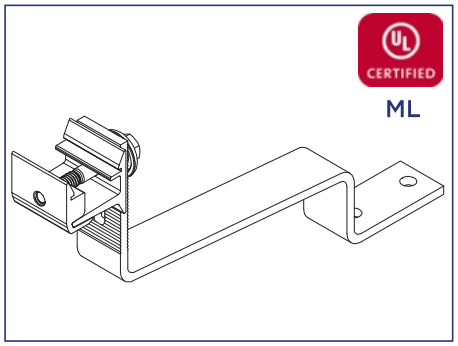

Flat Tile Roof Attachment

Roof attachment kit for flat tile roofs including tile hook and hardware

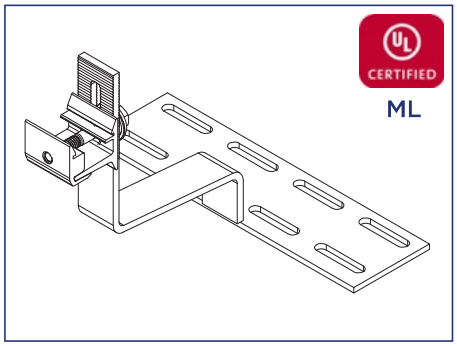

W & S Tile Roof Attachment

Roof attachment kit for W and S tile roofs including tile hook and hardware

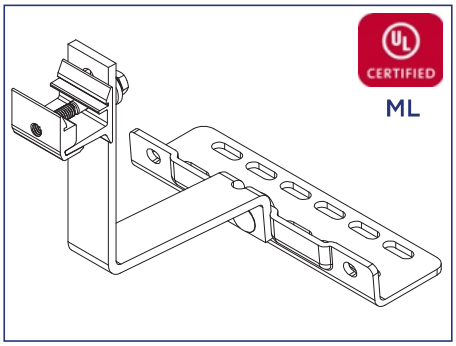

Tile Roof Attachment

Roof attachment kit for W, S, and Flat tile roofs including adjustable height tile hook, base, and hardware

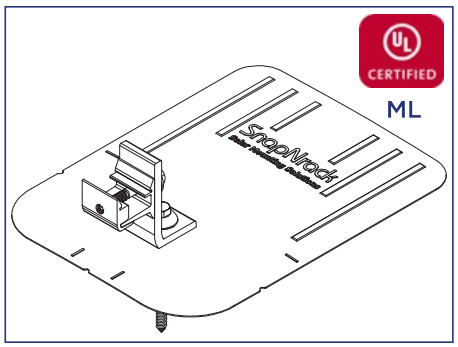

Umbrella L Foot Roof Attachment

Roof attachment kit for composition shingle roofs including L foot, umbrella lag screw, flashing, and hardware

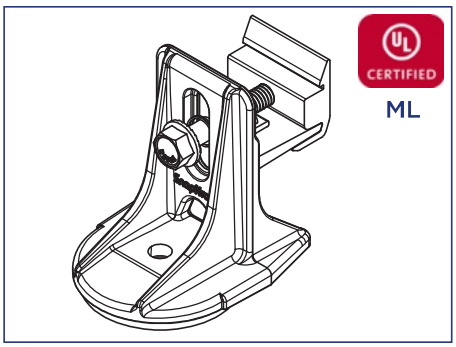

SpeedSeal Foot Roof Attachment

Roof attachment kit for composition shingle roofs including chemically flashed L foot, lag screw, and hardware

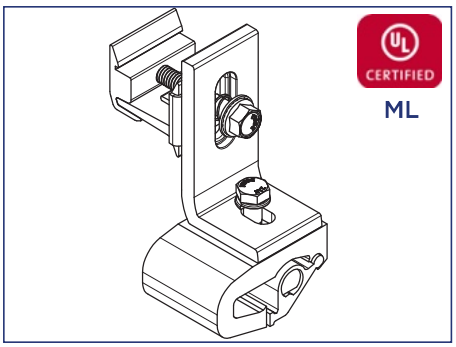

Seam Clamp Roof Attachment

Roof attachment for standing seam metal roofs including seam clamp, L foot, and hardware

UL Listing Legend:

ML – Evaluated for Mechanical Loading

G/B – Evaluated for Grounding/Bonding

Component Details

Structural Components

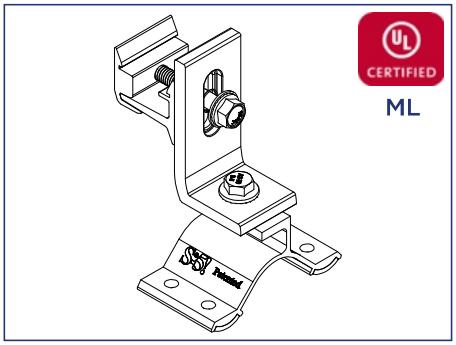

S-5! CorruBracket with Ultra Rail hardware

Bottom-fixed, low-profile roof attachment kit for corrugated roofing profiles including S-5! CorruBracket, L Foot, and hardware

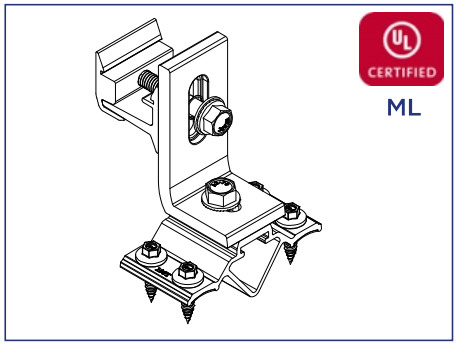

S-5! CorruBracket 100T with Ultra Rail hardware

Low profile, top-fix roof attachment kit for corrugated roofing profiles including S-5! CorruBracket 100T, L Foot, and hardware

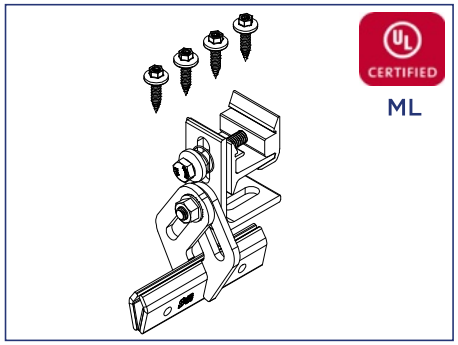

S-5! ProteaBracket with Ultra Rail hardware

Roof attachment kit for trapezoidal roofing profiles including S-5! ProteaBracket and Ultra Rail mounting hardware

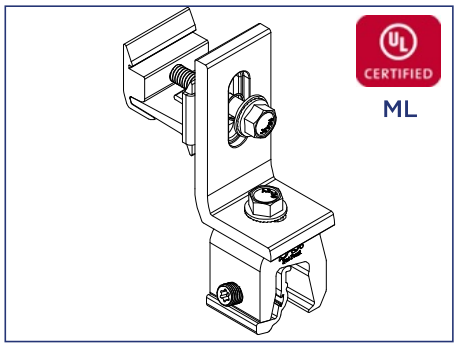

S-5-N-mini with Ultra Rail hardware

Roof attachment kit for standing seam metal roofing profiles including S-5-N-mini, L Foot, and hardware

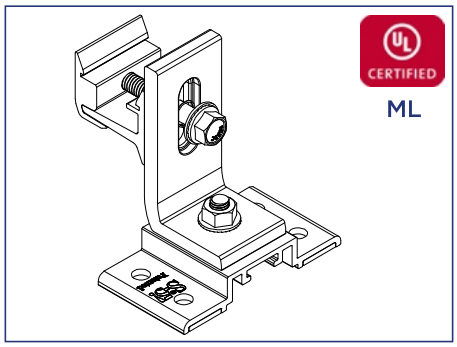

S-5! SolarFoot with Ultra Rail hardware

Roof attachment kit for exposed-fastened metal roofing profiles including S-5! SolarFoot, L Foot, and hardware

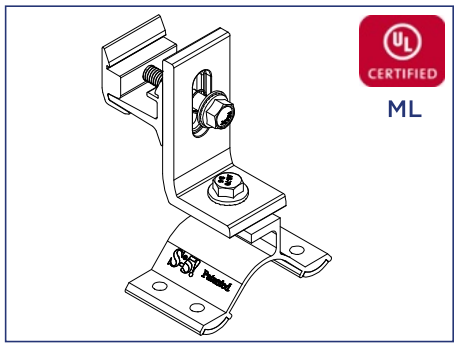

S-5! VersaBracket with Ultra Rail hardware

Roof attachment kit for Bottom-fixed, Trapezoidal, or Exposed-fastened metal roofing profiles including S-5! VersaBracket, L Foot, and hardware

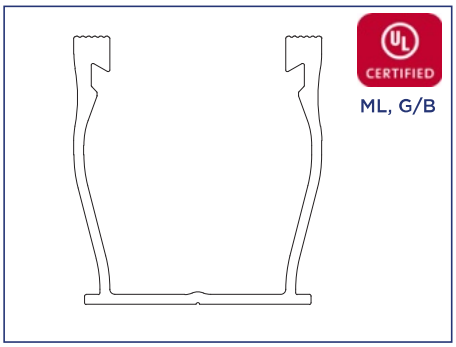

UR-40 Rail

UR-40 rail for Ultra Rail roof mount racking system

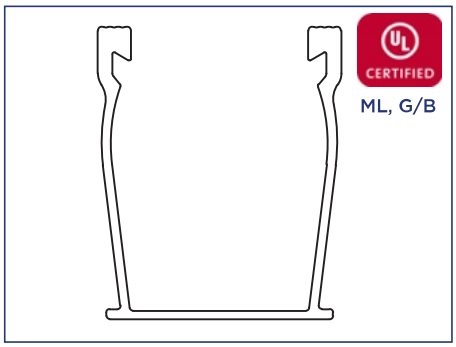

UR-45 Rail

UR-45 rail for Ultra Rail roof mount racking system

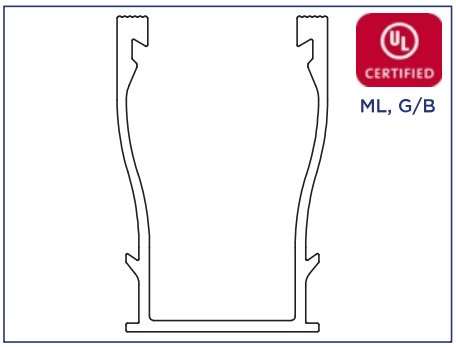

UR-60 Rail

UR-60 rail for Ultra Rail roof mount racking system

UL Listing Legend:

ML - Evaluated for Mechanical Loading

G/B - Evaluated for Grounding/Bonding

Component Details

Structural Components

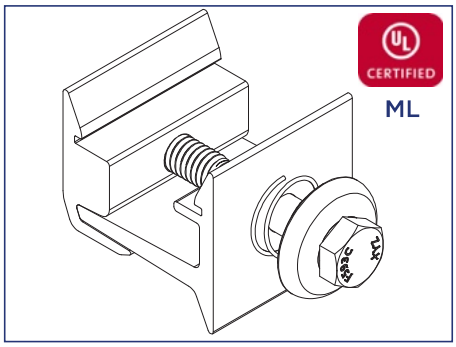

Ultra Rail Mounting Hardware

Hardware kit for attaching Ultra Rail to any roof attachment that uses an L foot or other slotted mount that accepts 5/16" hardware

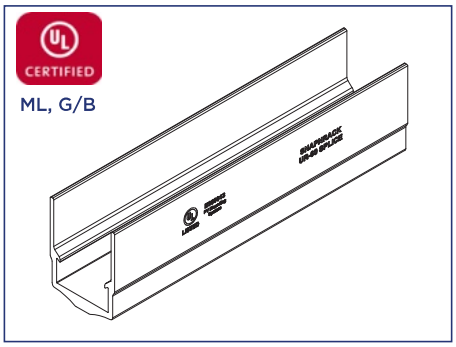

UR-60 Rail Splice

UR-60 rail splice component including slide-on sleeve and hardware

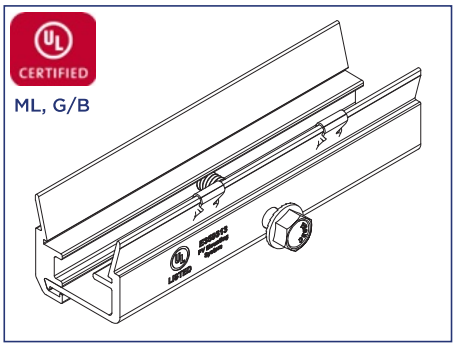

UR-40 & UR-45 Rail Splice

UR-40 & UR-45 Rail Splice component including two splice halves and hardware

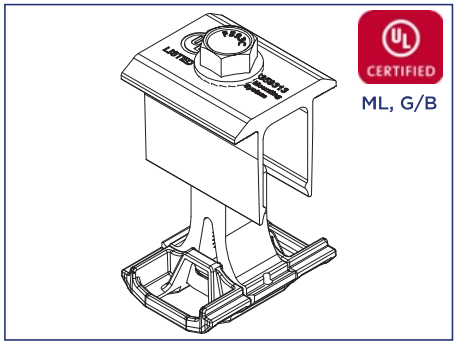

Ultra Rail Mid Clamp

Universal top-down module mid clamp including clamp and hardware

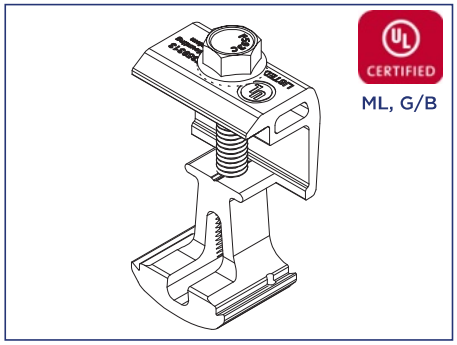

Ultra Rail End Clamp

Universal top-down module end clamp including clamp and hardware

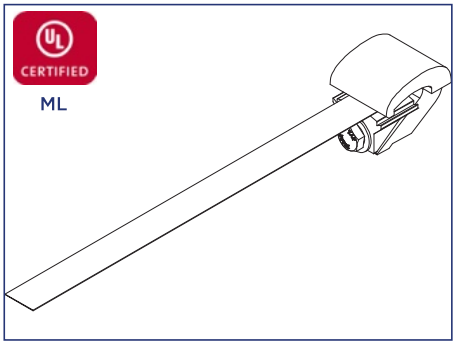

Universal End Clamp

Bottom-mount module end clamp including clamp and hardware

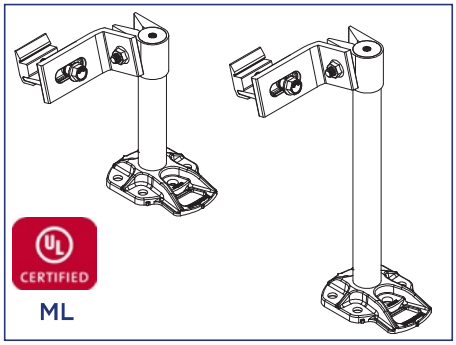

OmniBase™ with Fixed Tilt Standoff Roof Attachments

Roof attachment kits providing additional tilt off roof surface including standoffs, bases, and hardware

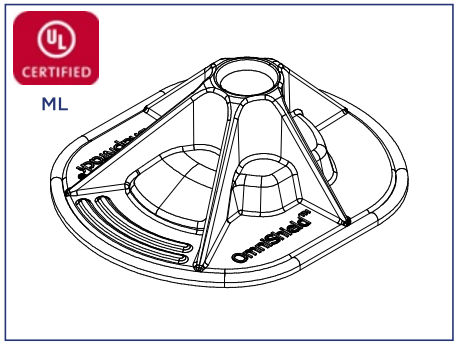

OmniShield

Roof Flashing & support for OmniBase™ Standoffs & Tilt Standoffs

UL Listing Legend:

ML – Evaluated for Mechanical Loading

G/B – Evaluated for Grounding/Bonding

Component Details

Wire Management/Grounding Component

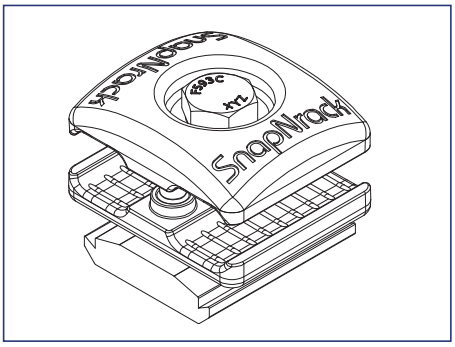

Universal Wire Clamp

Wire management component used to secure conductors between rails

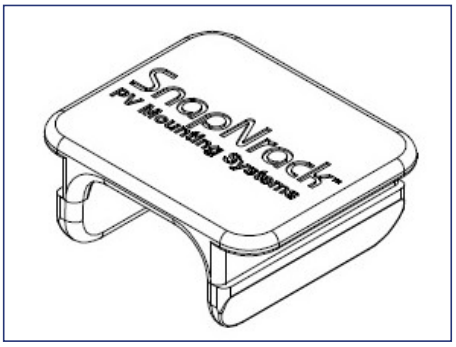

Wire Retention Clip

Wire management component used to secure conductors in rails

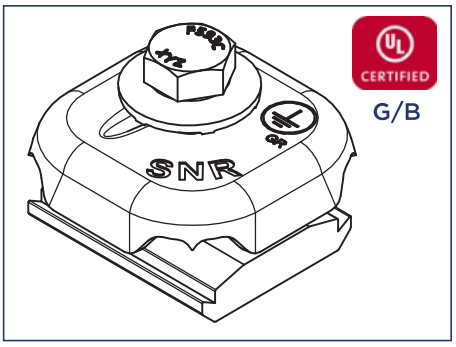

SnapNrack OmniLug

Serves as an Array Ground Lug, used to bond module rows to ground

OR

Rail attachment for module level power electronics (MLPE) like microinverters and optimizers

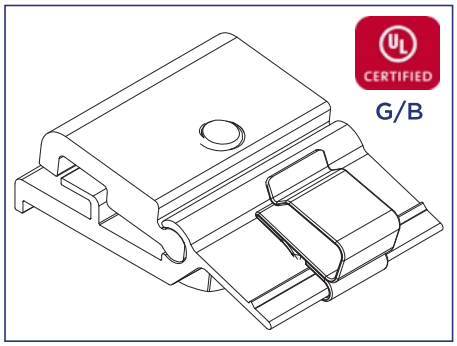

MLPE Frame Attachment Kit

Module frame attachment for module level power electronics like microinverters and optimizers

Ilsco Lay-In Lug – GBL-4DBT

Aesthetic Components

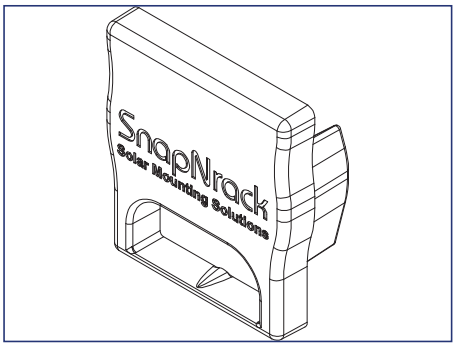

UR-40 Rail End Cap

Plastic end cap for UR-40 Rail

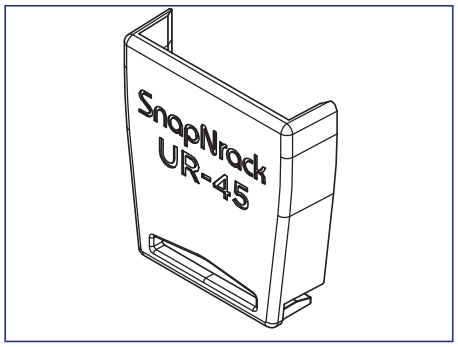

UR-45 Rail End Cap

Plastic end cap for UR-45 Rail

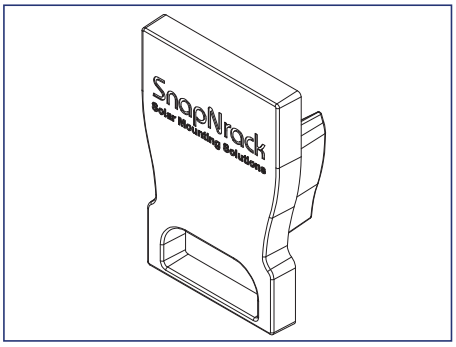

UR-60 Rail End Cap

Plastic end cap for UR-60 Rail

UL Listing Legend:

ML – Evaluated for Mechanical Loading

G/B – Evaluated for Grounding/Bonding

Hardware Torque Specifications

Hardware Description	Torque Specification
SnapNrack OmniLug to Grounding Electrode Conductor (6-12 AWG Sol Cu, 8-10 AWG Str. Cu) SnapNrack OmniLug as a MLPE Rail Attachment Kit	10.8 ft-lbs (130 in-lbs)
SnapNrack Ground Lug model 242-92202 to Grounding Electrode Conductor and Module Frame	8 ft-lbs (96 in-lbs)
Ilsco Lay-in Lug GBL-4DBT to Rail or Module Frame	2.92 ft-lbs (35 in-lbs)
Ilsco Lay-in Lug GBL-4DBT to Grounding Electrode Conductor (10-14 AWG Sol. Cu)	1.67 ft-lbs (20 in-lbs)
Ilsco Lay-in Lug GBL-4DBT to Grounding Electrode Conductor (8 AWG Str. Cu)	1.04 ft-lbs (25 in-lbs)
Ilsco Lay-in Lug GBL-4DBT to Grounding Electrode Conductor (4-6 AWG Str. Cu); Ground Lug SGB-4 to Grounding Electrode Conductor (4-14 AWG Sol. or Str. Cu)	1.46 ft-lbs (35 in-lbs)
Ilsco Ground Lug SGB-4 to Module Frame	6.25 ft-lbs (75 in-lbs)
Universal End Clamp, Flange Nut for MRB	10 ft-lbs (120 in-lbs)
Rail Splice, Ultra Rail Mounting Hardware to Rail (Included in Flashed L Foot, Tile Hook F, Tile Hook WS, Adjustable Tile Hook, MRB, Wide Base Seam Clamp, UltraFoot Rafter, UltraFoot Deck, UltraFoot Anchor, SpeedSeal Foot, and all S-5! mounts)	12 ft-lbs (144 in-lbs)
Ultra Rail End Clamp, Ultra Rail Mid Clamp	16 ft-lbs (192 in-lbs)
Wide Base Seam Clamp	15-16 ft-lbs (180-192 in-lbs)
SolarEdge Frame Mounted Bracket to Module Frame	7 ft-lbs (84 in-lbs)
MLPE Frame Attachment Kit	10 ft-lbs (120 in-lbs)
Enphase Frame Mounted Bracket to Module Frame	13 ft-lbs (156 in-lbs)

Pre-Installation Requirements

Site Survey

- Measure the roof surfaces and develop an accurate drawing, including any obstacles such as chimneys and roof vents.
- If plans are available, check to make sure that the plans match the final structure.
- Identify any roof access areas or keep-out areas as required by the local AHJ (i.e. fire lanes).
- Identify any construction issues that may complicate the process of locating roof framing members from the roof surface.
- If you find structural problems such as termite damage or cracked roof framing members that may compromise the structure's integrity, consult a structural engineer.

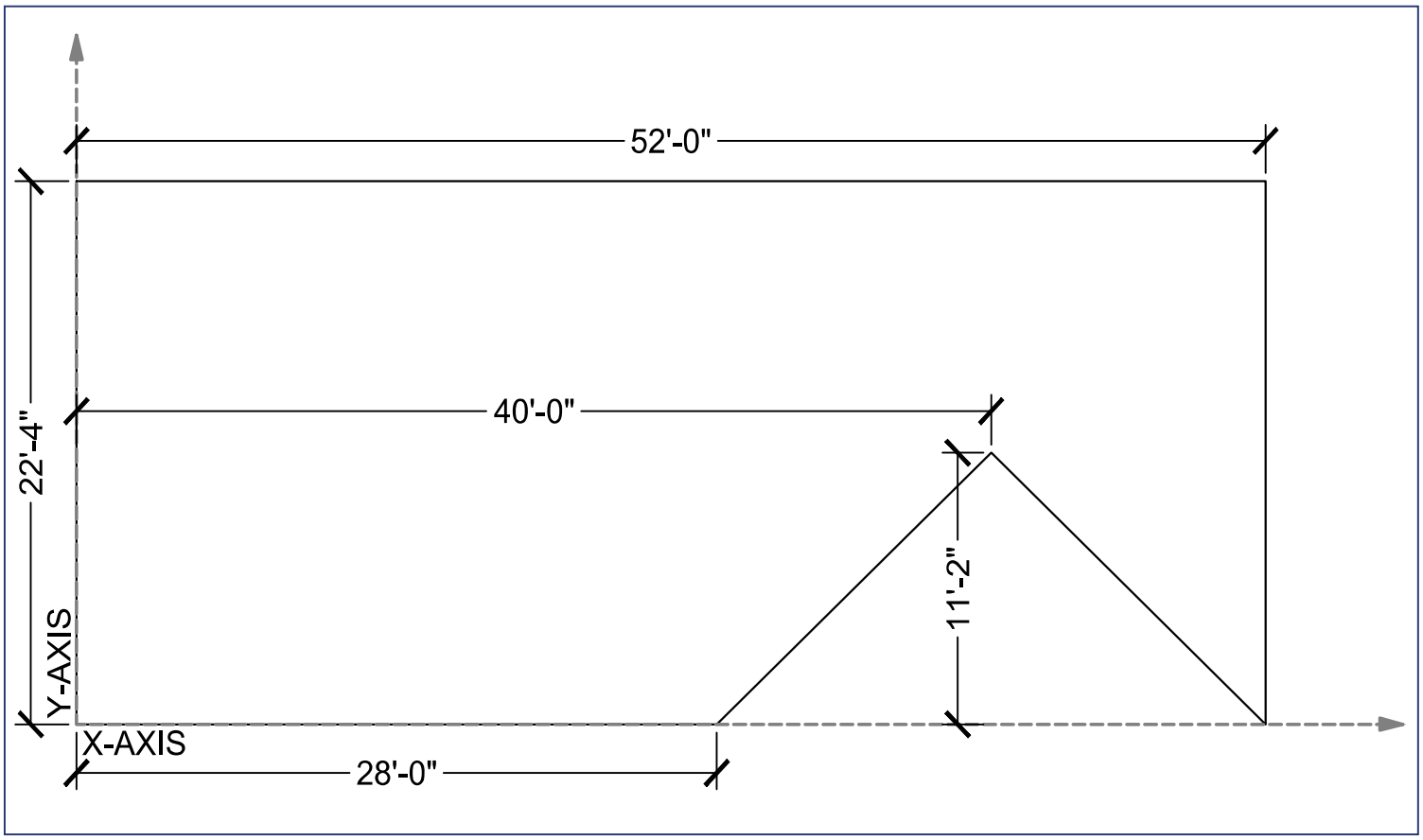

Pre-Installation Requirements

Design Guidance

1) Layout the modules in the available roof area. Adjacent modules in the same row are spaced 1/2" apart by Mid Clamps or 3/4" apart by Ultra Rail Mid Clamps. Adjustable End Clamps require an additional 1" of rail extending past module frame, while Universal End Clamps require no extra rail. When installing multiple rows of modules, a minimum spacing gap of 1/8" should be used between rows (3/4" is recommended for improved rail spans).

2) Draw the roof framing member location on the layout to identify where roof attachments can be installed.

3) Determine site conditions for calculating the engineering values, confirm site conditions and code versions comply with local AHJ requirements.

4) Reference site conditions and system specifications in Ultra Rail Structural Engineering Report to determine maximum attachment spacing and resulting cantilever values (34% of maximum attachment spacing).

5) Draw roof attachment locations on layout based on maximum attachment spacing and cantilever values.

6) Confirm design complies with UL 2703 Listing for Mechanical Loading. For more details on the mechanical loading details see the Mechanical Loading Specifications section.

7) To simplify the design process and automatically generate a bill of materials (BOM) for the mounting system, use the Ultra Rail Configuration Tool located on the SnapNrack website. Always refer to Approved Module Lists in Installation Manuals to ensure installation complies with UL 2703 Listing.

8) Mark distance from array edge to identifiable roof features in x and y axes.

9) Insert SnapNrack installation details in to design set specific to the project requirements.

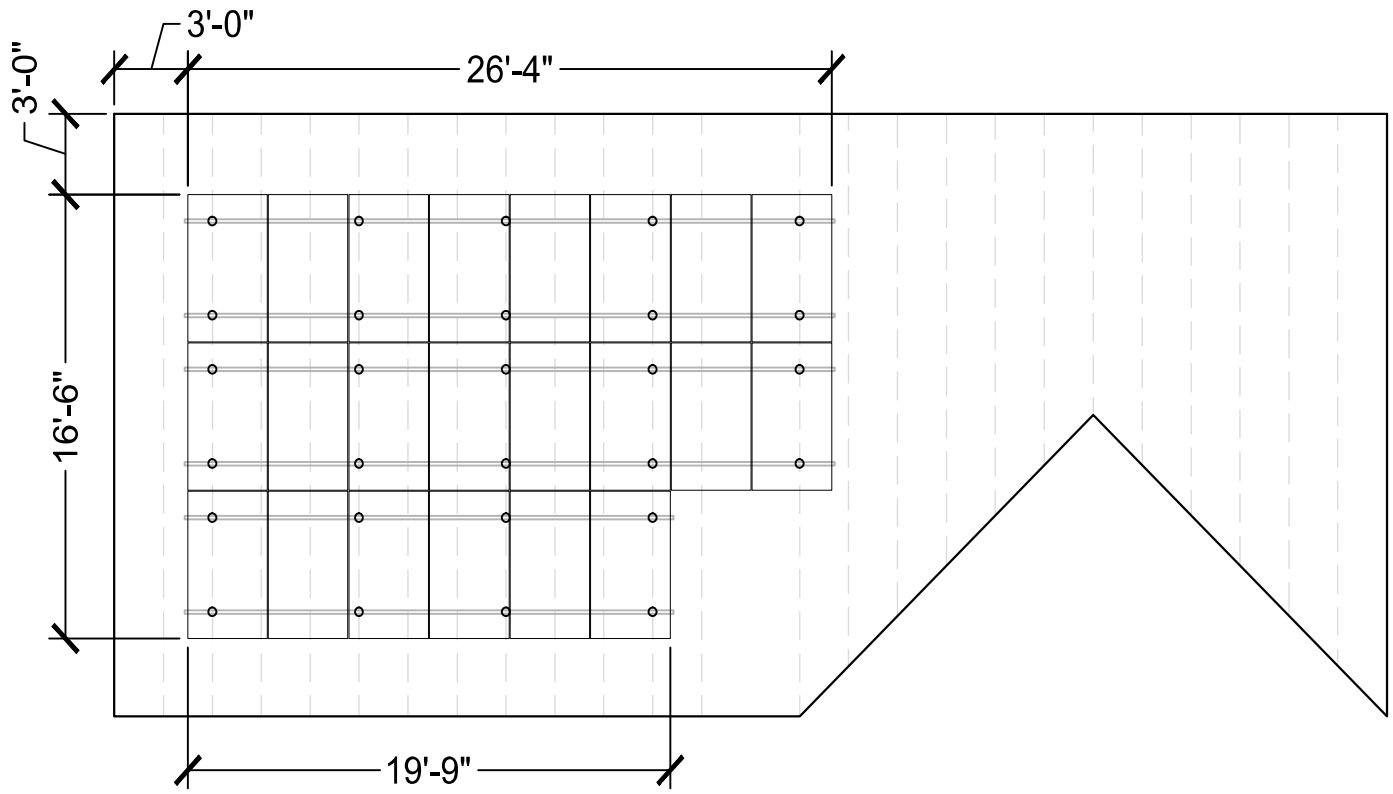

Pre-Installation Requirements

Design Note:

Ultra Rail allows for multiple mounting configurations. Modules can be mounted in portrait (long side of module perpendicular to ridge) or landscape (long side of module parallel to ridge) orientations. In addition, modules can also be short side-mounted (module clamps on short side) or long side-mounted (module clamps on long side). Long-side mounting is recommended for maximum material efficiency. Most residential structures utilize roof framing members that run in-slope with the roof, so a portrait orientation with long-side mounting is typically the most efficient use of materials.

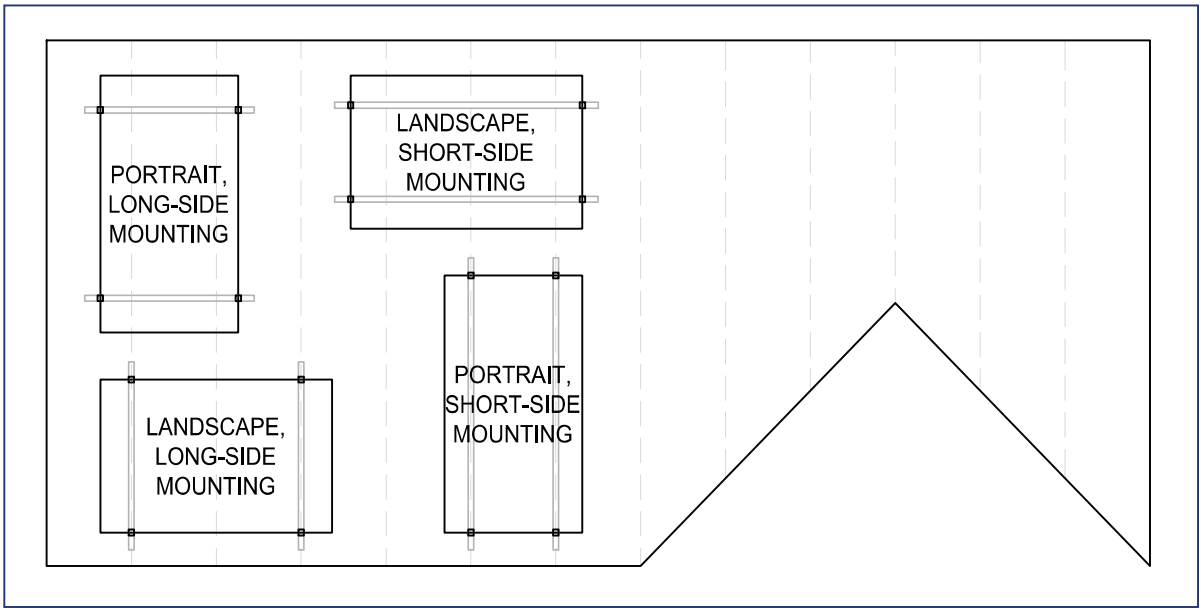

Installation Note:

- Ensure the lag screws will be installed in a solid portion of the roof framing member.
- If the roof framing member is not found then seal the pilot hole immediately with roofing sealant.

Safety Guidance

- Always wear appropriate OSHA approved safety equipment when at active construction site
- Appropriate fall protection or prevention gear should be used. Always use extreme caution when near the edge of a roof
- Use appropriate ladder safety equipment when accessing the roof from ground level
- Safety equipment should be checked periodically for wear and quality issues
- Always wear proper eye protection

System Layout

1) Transfer the array layout to the roof using a roof marking crayon to mark the inside and outside corners of the array.

2) Locate the estimated roof framing member positions and mark them in the array area with a roof marking crayon.

3) Transfer rail locations using a chalk line.

4) Mark roof attachment locations on the roof, noting that attachments will be located at intersections of rails and roof framing members. Layout rails such that module frames do not overhang mounting rails more than specified by module manufacturer, more than 25% of total module length, or more than required by the Class A Fire Certification (see Certification Details section).

Layout Note:

Ensure final roof attachment locations do not exceed the maximum attachment spacing and cantilever specified in the design.

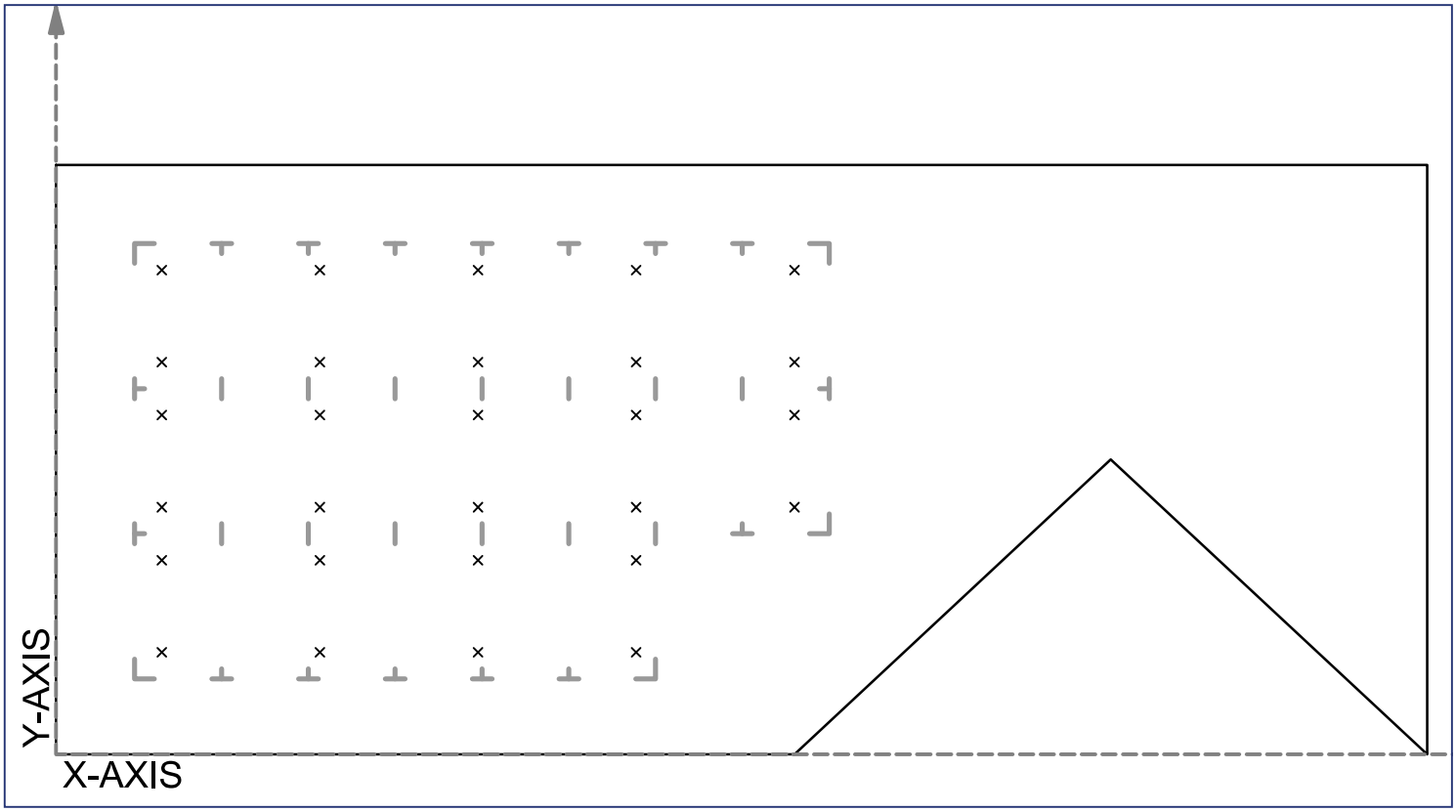

L Foot Mount

Required Tools

- Hammer or Stud Finder
- Roof Marking Crayon
- Drill with 3/16” Pilot Drill Bit
- Roof Sealant
- Torque Wrench
- Socket Wrench
- 1/2” Socket

Materials Included - L Foot Mount

1. (1) SnapNrack Comp Umbrella Flashing
2. (1) SnapNrack Umbrella Lag Screw
3. (1) SnapNrack Umbrella L Foot
4. (1) SnapNrack Ultra Mount (Tapped)
5. (1) SnapNrack Ultra Mount (Thru-Hole)
6. (1) SnapNrack Ultra Mount Spring
7. (1) SnapNrack Ultra Mount Spring Cage
8. (1) 5/16”-18 X 2-1/4” SS HCS Bolt

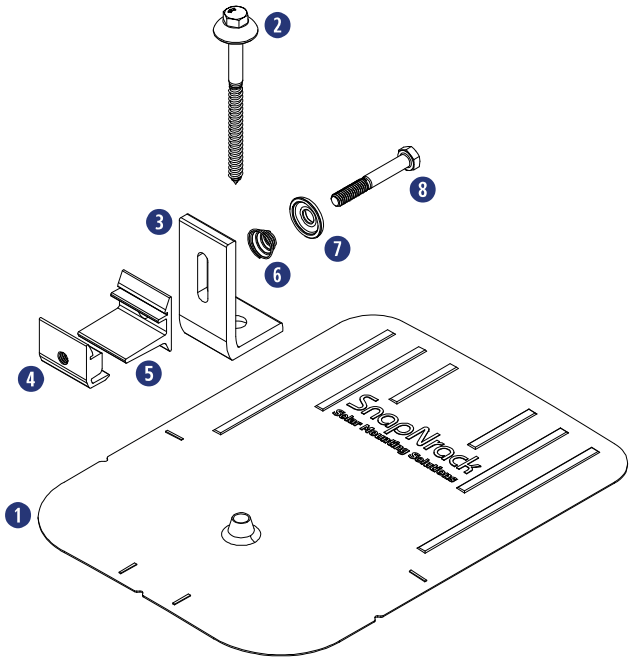

Application Note:
Install on composition shingle roofs.

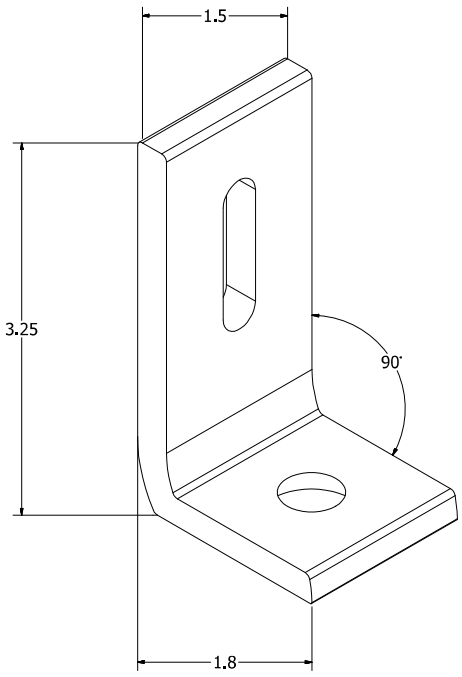

Dimensioned L Foot

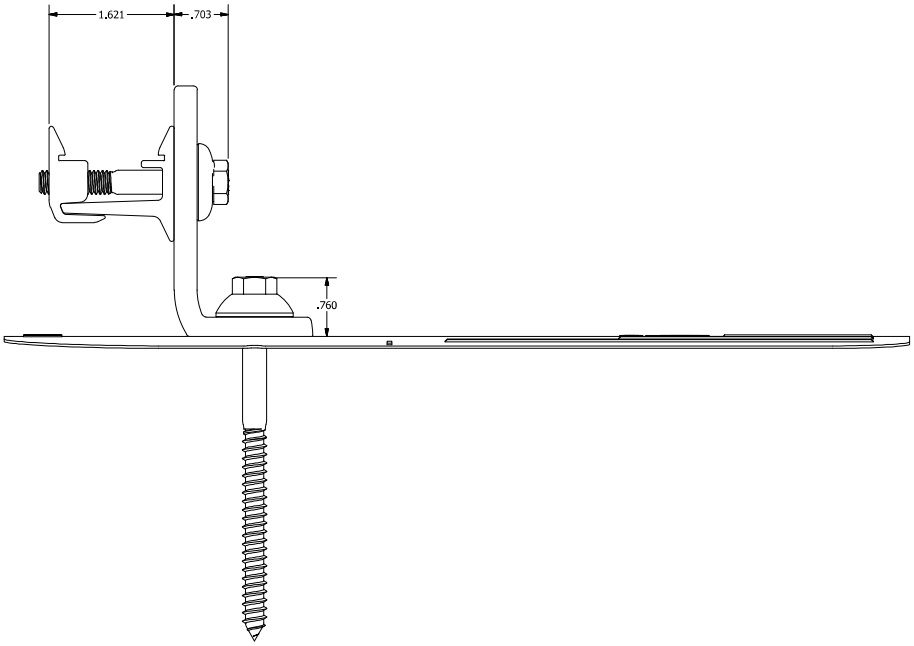

Dimensioned L Foot Assembly

INSTALLATION INSTRUCTIONS

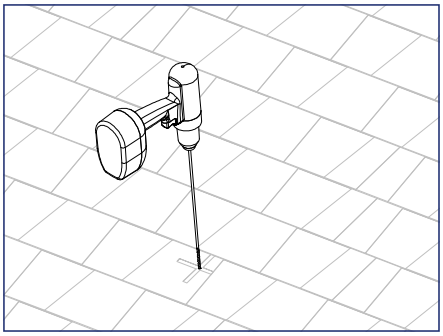

1) Using roof attachment locations drawn during system layout, drill a pilot hole through the roofing material into the roof framing member.

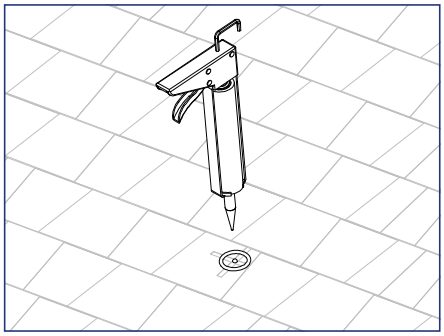

2) Apply roofing sealant in and around the pilot hole, and directly onto the lag screw to ensure a water tight seal.

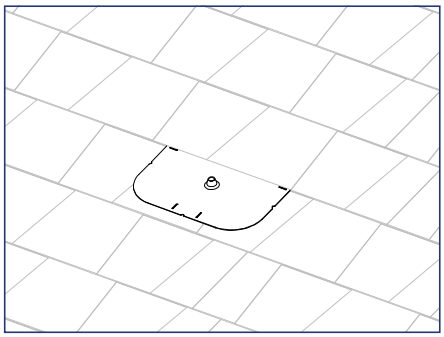

3) Pry up shingles with a breaker bar and install flashing underneath shingle course above pilot hole, and position flashing so cone is in line with pilot hole.

Install Note:

Ensure flashing extends minimum (2) courses above pilot hole, and does not overhang bottom edge of shingle course.

Apply a horseshoe of sealant under flashing to direct water away from penetration.

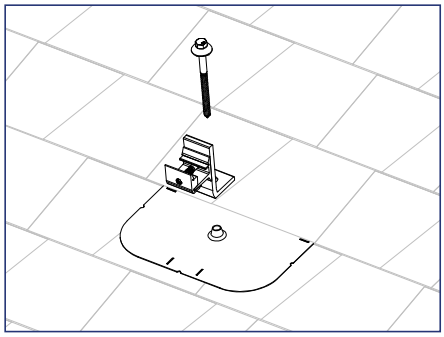

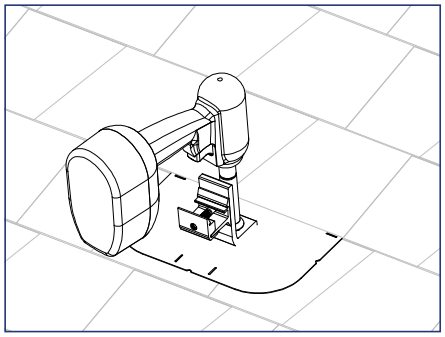

4) Insert Umbrella Lag Screw through Umbrella L Foot and cone in flashing, then drive lag screw for minimum 2.5” embedment into the roof framing member.

Install Note:

The L Foot can be attached in any orientation.

Best Practice:

If using an impact driver, finish tightening lag screw with a hand wrench to prevent L Foot from rotating.

SpeedSeal™ Foot

Required Tools

- Hammer or Stud Finder
- Roof Marking Crayon
- Drill with 3/16" Pilot Drill Bit
- Roof Sealant
- Torque Wrench
- Socket Wrench
- 1/2" Socket

Materials Included - SpeedSeal™ Foot

1. (1) SnapNrack Sealing Lag Screw
2. (1) SnapNrack SpeedSeal™ Foot
3. (1) SnapNrack Ultra Mount (Tapped)
4. (1) SnapNrack Ultra Mount (Thru-Hole)
5. (1) SnapNrack Utra Mount Spring
6. (1) 5/16"-18 X 2" SS Flange Bolt

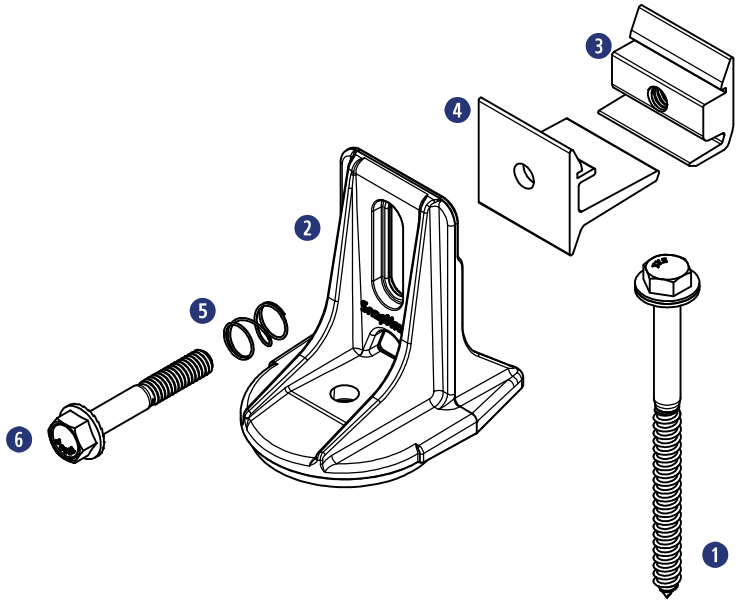

Application Note:

Minimum Recommended Roof Slopes:

- Composition Shingle, 9-1/2° (2 : 12)
- Rolled Comp & Membranes, 7°
- May be installed on other compatible Low Slope roofs when appropriate

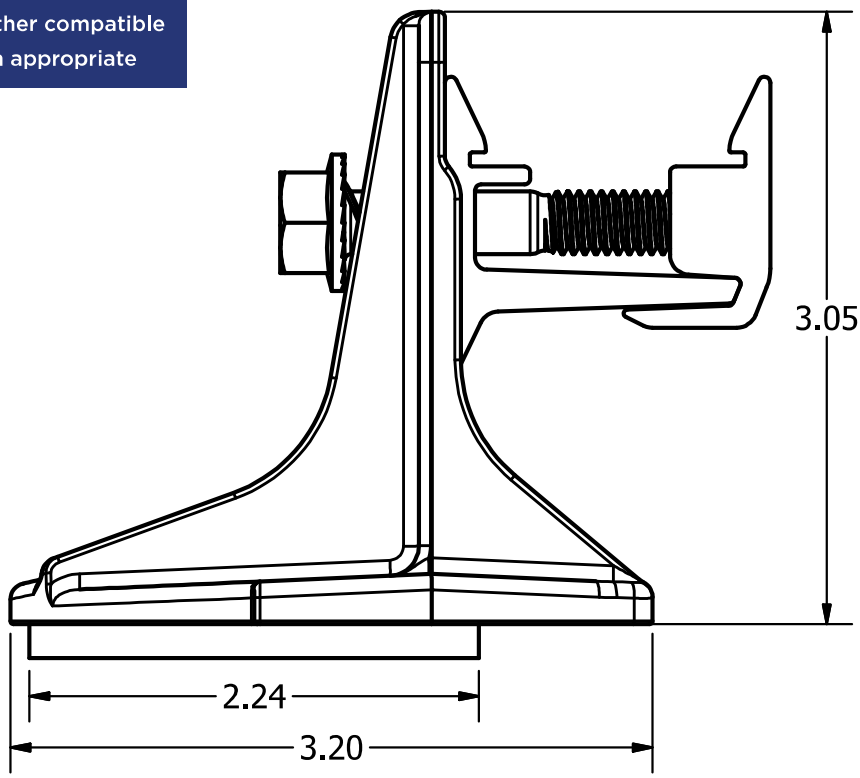

Dimensioned SpeedSeal™ Foot

INSTALLATION INSTRUCTIONS

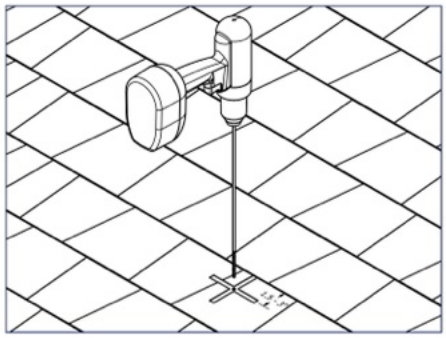

1) Using roof attachment locations drawn during system layout, drill a pilot hole through the roofing material into the roof framing member.

Best Practice:

Pilot hole should be located 1.5" - 3" from edge of shingle course above, and SpeedSeal™ Foot should never be installed across two shingle courses.

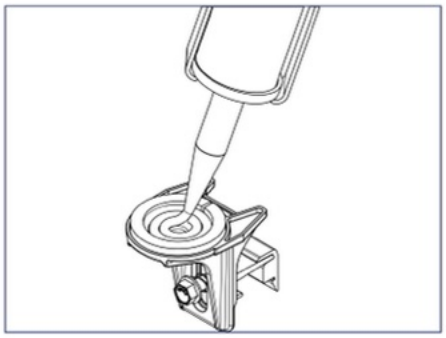

2) Fill cavity on bottom of SpeedSeal™ Foot created by sealant ring with roof sealant, as well as the pilot hole to ensure a water tight seal.

Best Practice:

Remove any dirt or debris from roof surface before SpeedSeal™ Foot is installed.

All missed pilot holes should be properly sealed before SpeedSeal™ Foot is installed.

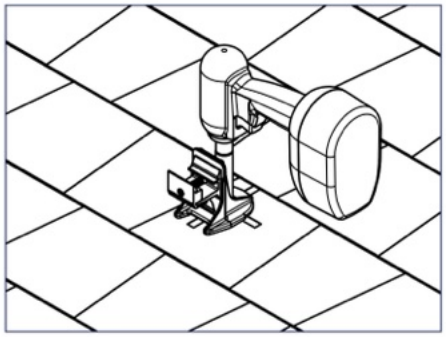

3) Insert sealing lag screw through SpeedSeal™ Foot, then drive lag screw for minimum 2.5" embedment into the roof framing member.

Install Note:

Roof sealant should seep out from the cavity located underneath the Ultra Rail Mount, which ensures that a sufficient amount of roof sealant has been applied. If no sealant is seen, remove SpeedSeal™ Foot and add more sealant before reinstalling.

SpeedSeal™ Foot may be installed in any orientation on the roof.

Best Practice:

If using an impact driver, finish tightening lag screw with a hand wrench to prevent Foot from rotating.

UltraFoot™, Rafter

Required Tools

- Roof Marking Crayon
- 1/2" Socket
- Socket Wrench or Impact Driver
- Drill with 3/16" Pilot Bit

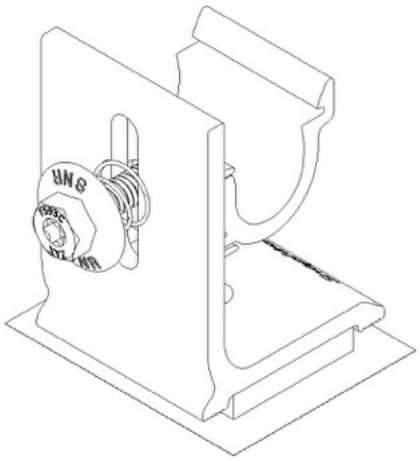

Materials Included - UltraFoot™, Rafter

1. (1) SnapNrack UltraFoot Base, Rafter
2. (1) SnapNrack Ultra Rail Mount
3. (1) SnapNrack Ultra Rail Mount Spring
4. (1) 5/16"-18 X 1" Wide Flange SS Bolt
5. (1) Butyl Pad

Other Materials Required (Not Shown)

Rafter Mount

① (1) 5/16" Lag Screw (2 ½" Minimum Embedment)

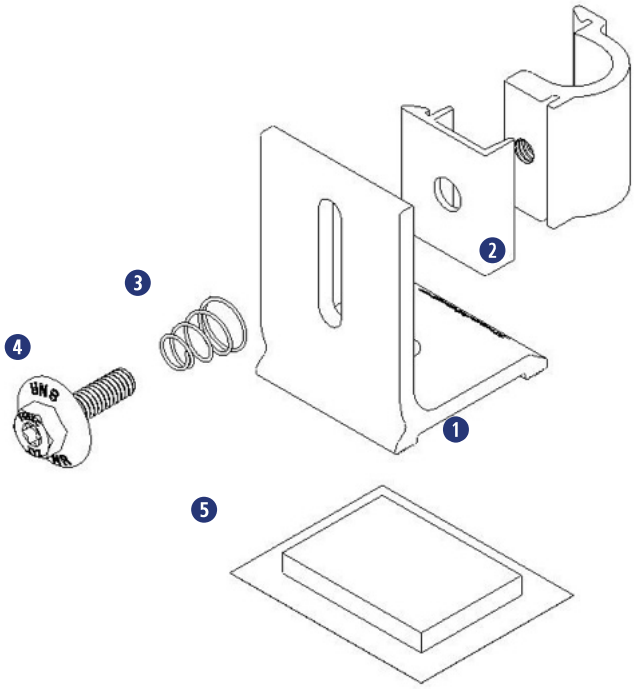

Application Note:

Compatible roofing substrates and minimum roof pitches:
Composition shingle- 9.5°
Low slope roofs including metal, concrete, rolled composition, EPDM, TPO, PVC, PolyPropylene, and SMS modified bitumen- ensure positive drainage with no chance of standing water.
Ensure roof construction and pitch meet minimum building code requirements.

Temperature Range:
Installation: 0°F - 150°F (-18°C - 66°C)
Service: -40°F - 200°F (-40°C - 93°C)
For installation temperatures below 32°F (0°C) it is recommended that the butyl is warmed to more easily conform to the roof texture.

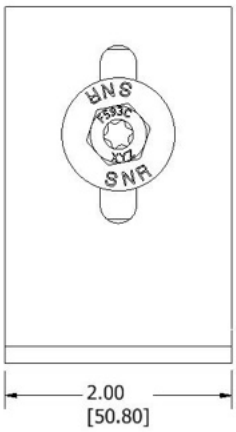

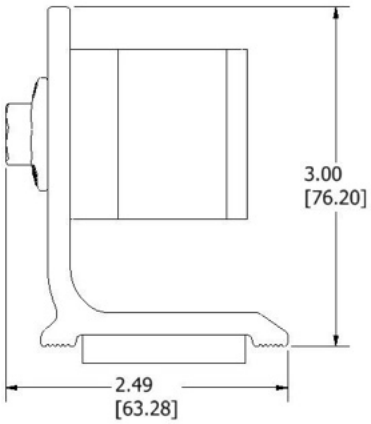

Dimensioned UltraFoot™, Rafter

ULTRAFOOT™, RAFTER - INSTALLATION INSTRUCTIONS

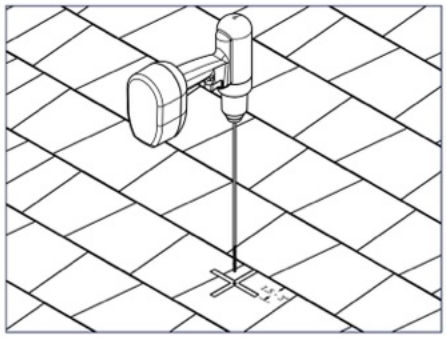

1) Using roof attachment locations drawn during system layout (refer to "Pre-Installation Requirements"), drill a pilot hole through the roofing material into the roof framing member.

Best Practice:

Double check attachment positions before pre-drilling or installing screws, butyl is difficult to move once tightened.

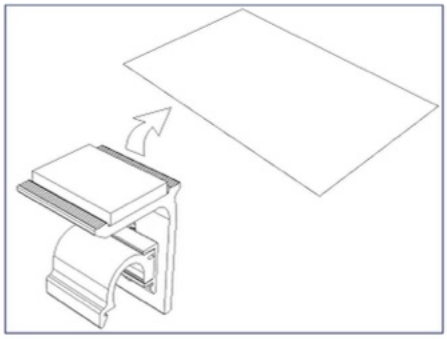

2) Remove paper to expose the butyl pad.

Best Practice:

For best results, install on dry, clean surfaces. Remove any moisture, ice, dirt, or debris from the roof surface before installation.

Install Note:

Tighten fastener until butyl squeezes out the sides of the attachment and the aluminum feet contact the roof.

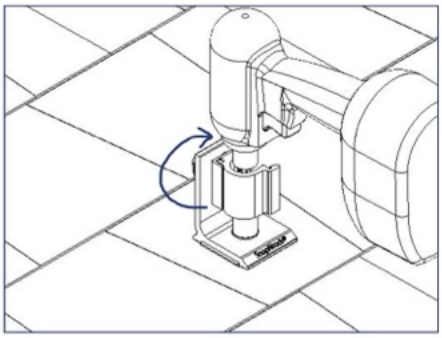

3) If needed, rotate the Ultra Rail Clamp to the vertical position for driver access. Insert sealing lag screw through UltraFoot™, Rafter then drive lag for minimum 2.5" embedment into roof framing member.

Install Note:

If possible, avoid installation directly over shingle joints/seams. Otherwise, fill the seam with sealant prior to installation.

Attachment can be installed in any orientation on the roof.

Any missed pilot holes not covered by at least 1/2" (13mm) of butyl should be properly flashed with a card flashing and sealant.

IMPORTANT, never install UltraFoot™, Rafter across two shingle courses. Do not install over shingle steps greater than 1/8" (3mm) tall.

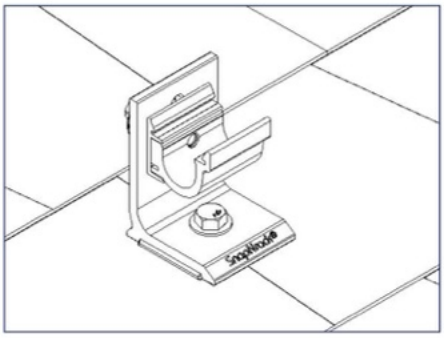

4) Rotate the Ultra Rail Clamp to install rail

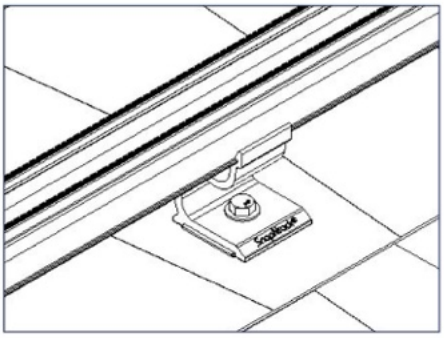

5) Install SnapNrack Ultra Rail directly to the Ultra Rail Mounting Hardware, level rails & tighten.

UltraFoot™, Deck

Required Tools

- Roof Marking Crayon
- 1/2" Socket
- Socket Wrench or Impact Driver
- Drill with 3/16" Pilot Bit

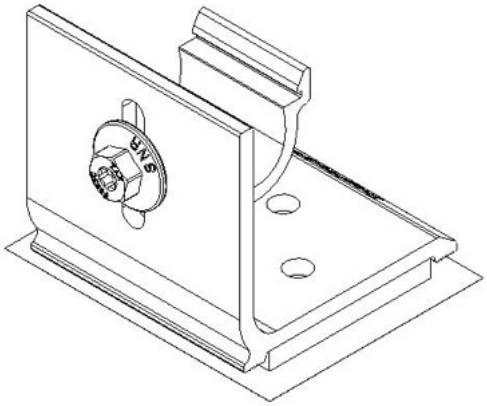

Materials Included - UltraFoot™ Deck

1. (1) SnapNrack UltraFoot Base, Deck
2. (1) SnapNrack Ultra Rail Mount
3. (1) SnapNrack Ultra Rail Mount Spring
4. (1) 5/16"-18 X 1" Wide Flange SS Bolt
5. (1) Butyl Pad

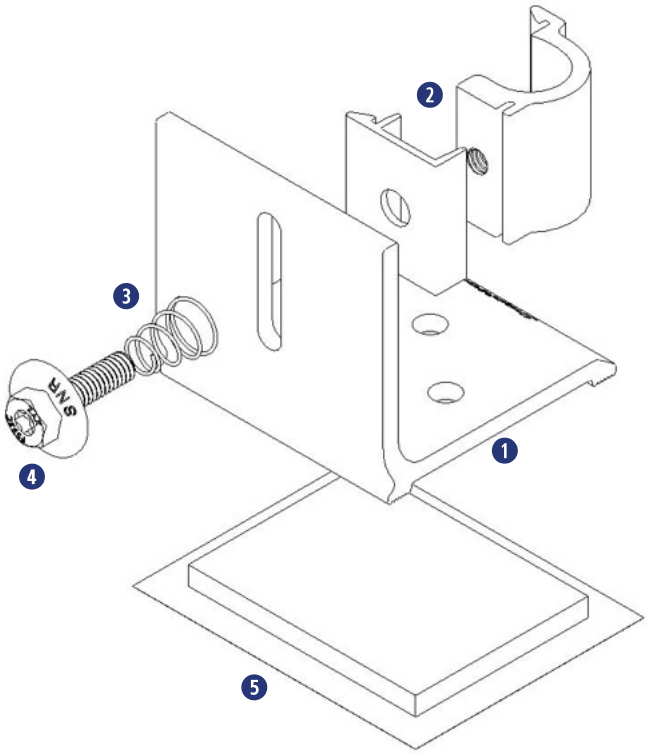

Other Materials Required (Not Shown)

Deck Mount (Minimum ½" Nominal Plywood)

① (4) #14 Wood Screws

Rafter Mount

① (2) #14 Wood Screws (1-1/4" Minimum Embedment Each)

Application Note:

Compatible roofing substrates and minimum roof pitches:
Composition shingle- 9.5°
Low slope roofs including metal, concrete, rolled composition, EPDM, TPO, PVC, PolyPropylene, and SMS modified bitumen- ensure positive drainage with no chance of standing water.
Ensure roof construction and pitch meet minimum building code requirements.

Temperature Range:
Installation: 0°F - 150°F (-18°C - 66°C)
Service: -40°F - 200°F (-40°C - 93°C)
For installation temperatures below 32°F (0°C) it is recommended that the butyl is warmed to more easily conform to the roof texture.

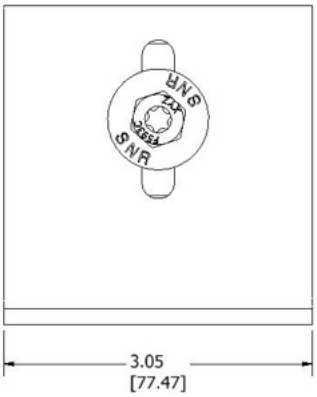

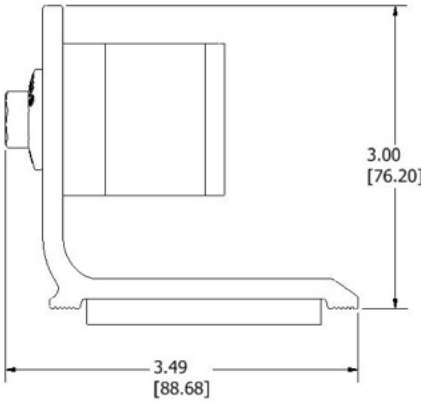

Dimensioned UltraFoot™ Deck

ULTRAFOOT™, DECK - INSTALLATION INSTRUCTIONS

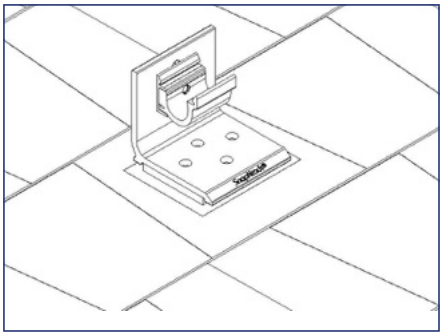

1) Using roof attachment locations drawn during system layout (refer to "Pre-Installation Requirements"), check positioning of UltraFoot™, Deck for proper alignment on shingle course.

Best Practice:
Double check attachment positions before installing screws, butyl is difficult to move once tightened.

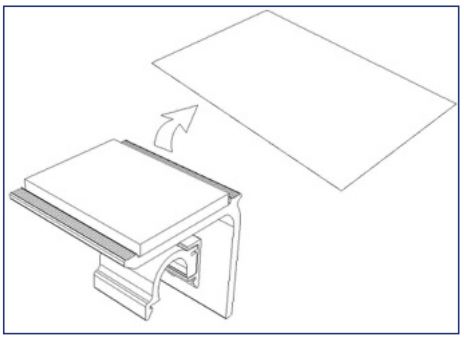

2) Remove paper to expose the butyl pad.

Best Practice:
For best results, install on dry, clean surfaces. Remove any moisture, ice, dirt, or debris from the roof surface before installation.

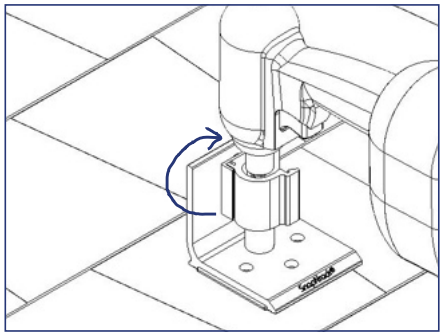

3) If needed, rotate the Ultra Rail Clamp to the vertical position for driver access. Insert #14 wood screw through the UltraFoot™, Deck and drive into roof.

Install Note:
Press the mount firmly into the roof while driving the first fastener to keep the mount steady.

Install Note:
If possible, avoid installation directly over shingle joints/seams. Otherwise, fill the seam with sealant prior to installation.

Attachment can be installed in any orientation on the roof.

IMPORTANT, never install UltraFoot™, Deck across two shingle courses. Do not install over shingle steps greater than 1/8" (3mm) tall.

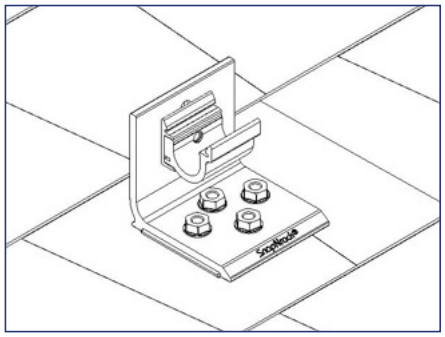

4) Repeat step 3 for remaining three wood screws. Rotate the Ultra Rail Mount to install the rail.

Install Note:
Tighten fasteners in opposing pattern until butyl squeezes out the sides of the attachment and the aluminum feet contact the roof.

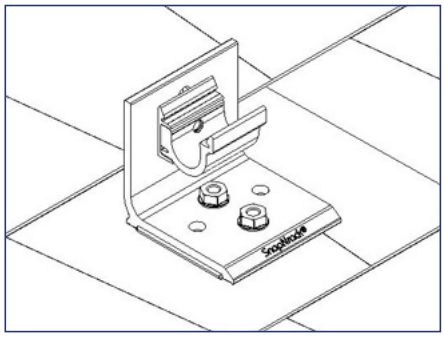

5) Optional rafter attachment step: After locating and marking rafters on the roof, use two (2) #14 wood screws to attach the UltraFoot™, Deck to rafters via the two center holes by following steps 1-3 above; no pre-drilling is required.

Best Practice:
If rafter is missed with first (2) screws, leave attachment in place and install other (2) screws. Install next attachment at deck mount spacing. This will prevent flashing open holes and the difficult relocation of butyl.

UltraFoot™, Anchor

Required Tools

- Roof Marking Crayon
- 1/2" Socket
- Socket Wrench or Impact Driver
- Drill with 3/16" Pilot Bit

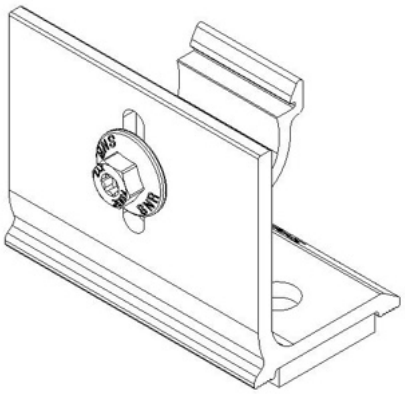

Materials Included - UltraFoot™, Anchor

1. (1) SnapNrack UltraFoot Base, Anchor
2. (1) SnapNrack Ultra Rail Mount
3. (1) SnapNrack Ultra Rail Mount Spring
4. (1) 5/16"-18 X 1" Wide Flange Recessed SS Bolt
5. (1) Butyl Pad

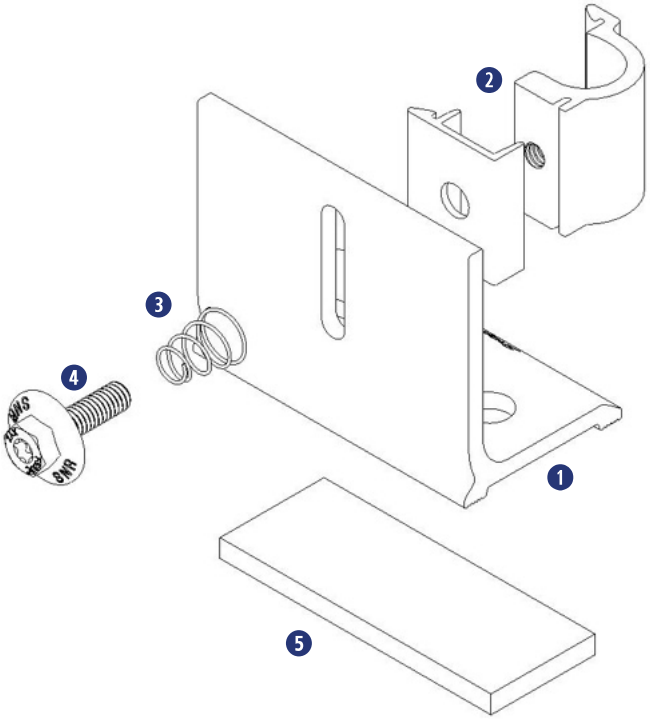

Other Materials Required (Not Shown)

Deck Mount (Minimum ½" Nominal Plywood)

① (2) DeckAnchor™ Screws

Rafter Mount

① (1) 5/16" Lag Screw (2 ½" Minimum Embedment)

Application Note:

Compatible roofing substrates and minimum roof pitches:
Composition shingle- 9.5°
Low slope roofs including metal, concrete, rolled composition, EPDM, TPO, PVC, PolyPropylene, and SMS modified bitumen- ensure positive drainage with no chance of standing water. Ensure roof construction and pitch meet minimum building code requirements.

Temperature Range:
Installation: 0°F - 150°F (-18°C - 66°C)
Service: -40°F - 200°F (-40°C - 93°C)
For installation temperatures below 32°F (0°C) it is recommended that the butyl is warmed to more easily conform to the roof texture.

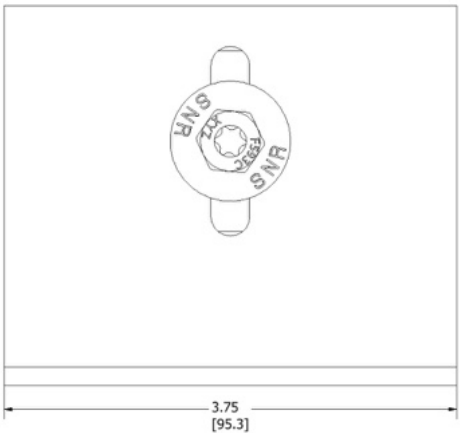

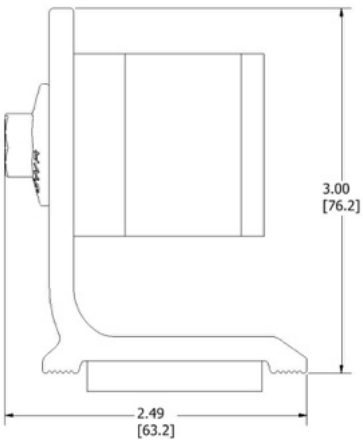

Dimensioned UltraFoot™, Anchor

ULTRAFOOT™, ANCHOR - RAFTER MOUNT INSTALLATION INSTRUCTIONS

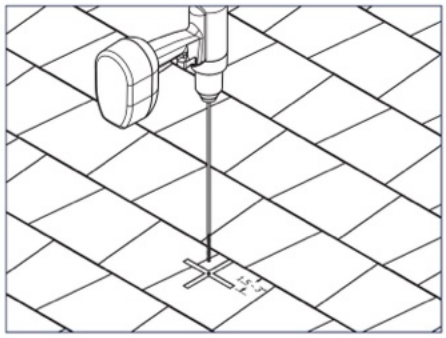

1) Using roof attachment locations drawn during system layout (refer to "Pre-Installation Requirements"), drill a pilot hole through the roofing material into the roof framing member.

Best Practice:

Double check attachment positions before pre-drilling or installing screws, butyl is difficult to move once tightened.

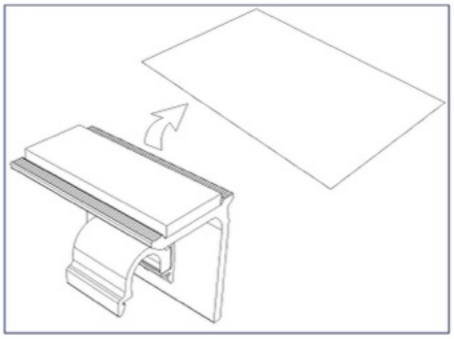

2) Remove paper to expose the butyl pad

Best Practice:

For best results, install on dry, clean surfaces. Remove any moisture, ice, dirt, or debris from the roof surface before installation.

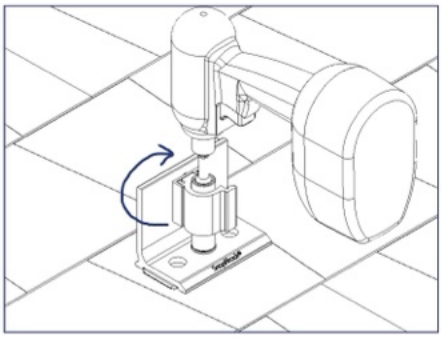

3) If needed, rotate the Ultra Rail Clamp to the vertical position for driver access. Insert sealing lag screw through the middle hole on UltraFoot™, Anchor then drive lag for minimum 2.5" embedment into roof framing member.

Install Note:

Tighten fastener until butyl squeezes out the sides of the attachment and the aluminum feet contact the roof.

Install Note:

If possible, avoid installation directly over shingle joints/seams. Otherwise, fill the seam with sealant prior to installation.

Attachment can be installed in any orientation on the roof.

Any missed pilot holes not covered by at least 1/2" (13mm) of butyl should be properly flashed with a card flashing and sealant.

IMPORTANT, never install UltraFoot™, Anchor across two shingle courses. Do not install over shingle steps greater than 1/8" (3mm) tall.

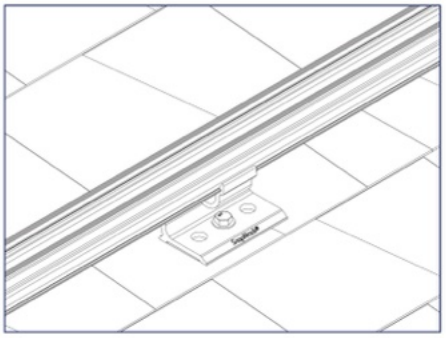

4) Install SnapNrack Ultra Rail directly to the Ultra Rail Mounting Hardware, level rails & tighten.

ULTRAFOOT™, ANCHOR - DECK MOUNT INSTALLATION INSTRUCTIONS

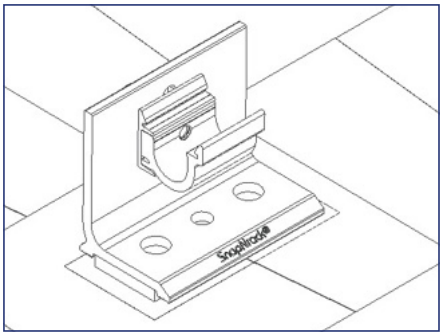

1) Using roof attachment locations drawn during system layout, check positioning of UltraFoot™, Anchor for proper alignment on shingle course.

Best Practice:

Double check attachment positions before installing screws, butyl is difficult to move once tightened.

Install Note:

If possible, avoid installation directly over shingle joints/seams. Otherwise, fill the seam with sealant prior to installation.

Attachment can be installed in any orientation on the roof.

IMPORTANT, never install UltraFoot™, Anchor across two shingle courses. Do not install over shingle steps greater than 1/8" (3mm) tall.

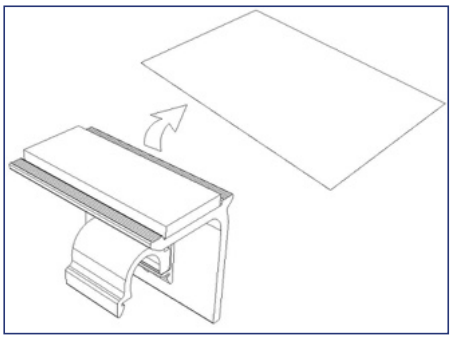

2) Remove paper to expose the butyl pad

Best Practice:

For best results, install on dry, clean surfaces. Remove any moisture, ice, dirt, or debris from the roof surface before installation.

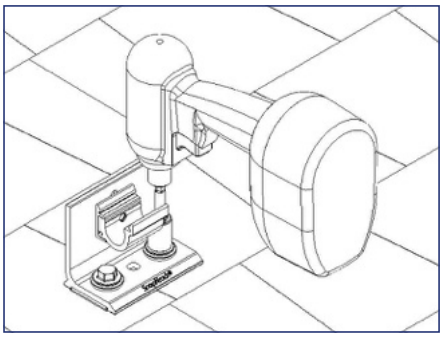

4) Repeat for the remaining DeckAnchor™ screw.

Install Note:

Tighten fasteners until butyl squeezes out the sides of the attachment and the aluminum feet contact the roof.

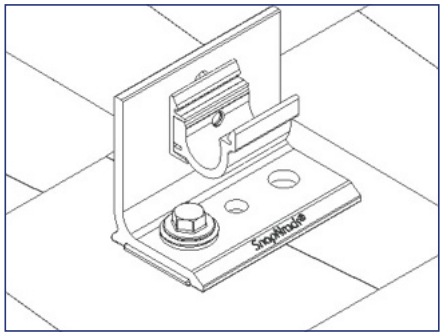

3) Insert first DeckAnchor™ screw through UltraFoot™, Anchor mounting hole and drive into roof.

Install Note:

Press the mount firmly into the roof while driving the first fastener to keep the mount steady.

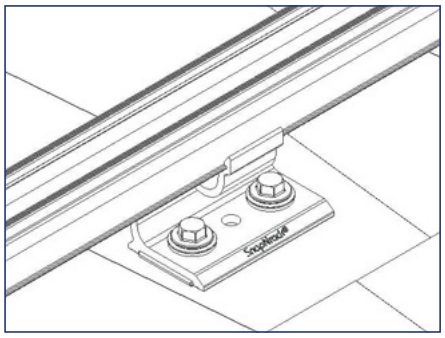

5) Install SnapNrack Ultra Rail directly to the Ultra Rail Mounting Hardware, level rails & tighten.

Tile Hook F

Required Tools

- Hammer or Stud Finder
- Roof Sealant
- 1/2” Socket
- Roof Marking Crayon
- Torque Wrench
- Flat Pry Bar
- Drill with 3/16” Pilot Drill Bit
- Socket Wrench
- Tape Measure

Materials Included - Ultra Rail Tile Hook F

1. (1) SnapNrack Ultra Rail Flat Tile Hook
2. (1) 5/16”-18 x 1-3/4” SS Flange Bolt
3. (1) SnapNrack Ultra Mount Spring Cage
4. (1) SnapNrack Ultra Mount Spring
5. (1) SnapNrack Ultra Mount (Thru-Hole)
6. (1) SnapNrack Ultra Mount (Tapped)

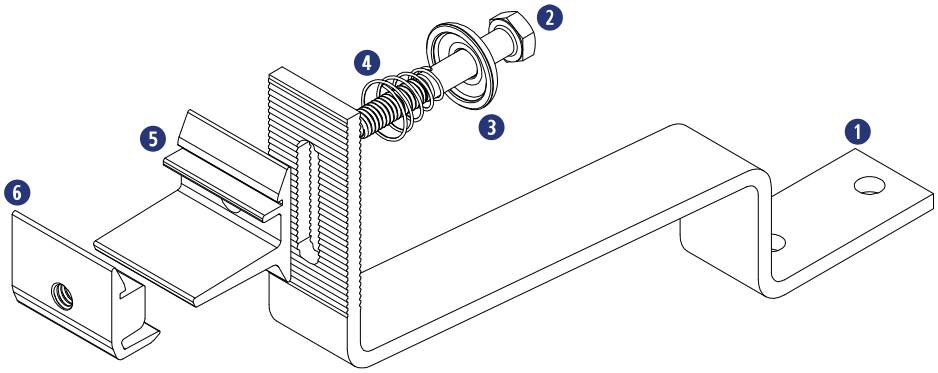

Other Materials Required (Not Shown)

① (2) 5/16” Lag Screw

② (2) 5/16” Washer

③ Flexible Flashing (when required for deck level flashing)

Application Note:
Install on flat concrete tile roofs.

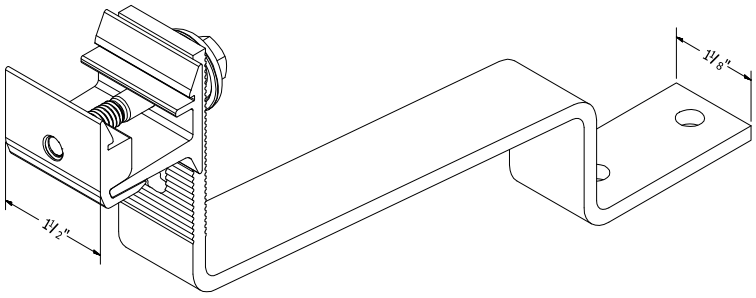

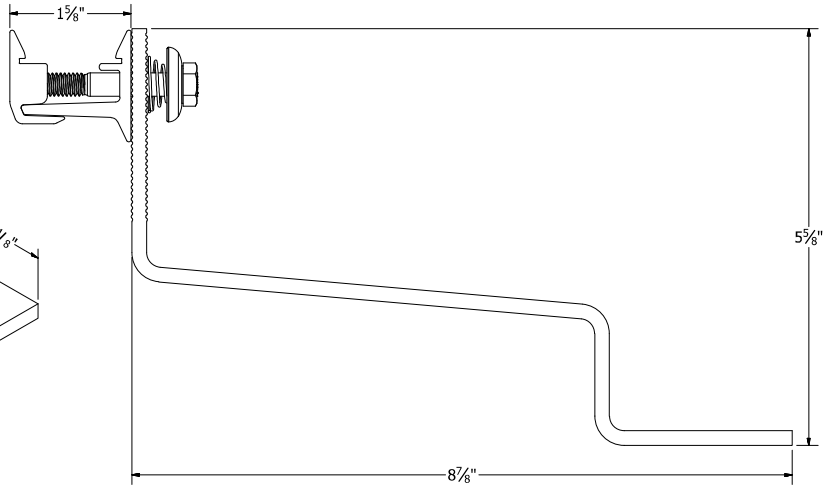

Dimensioned Ultra Rail Tile Hook F Assembly

INSTALLATION INSTRUCTIONS

1) Using roof attachment locations drawn during system layout, remove roof tile where the roof attachment will be installed.

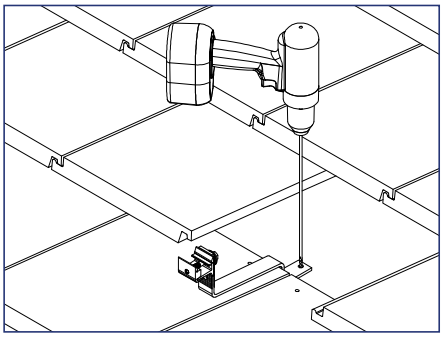

2) Align the hook over the rafter and drill two pilot holes through the roofing material into the roof framing member.

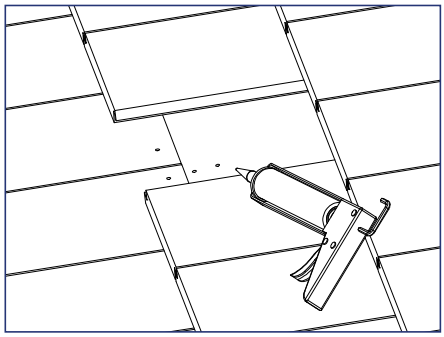

3) Apply roofing sealant to pilot holes and Tile Hook.

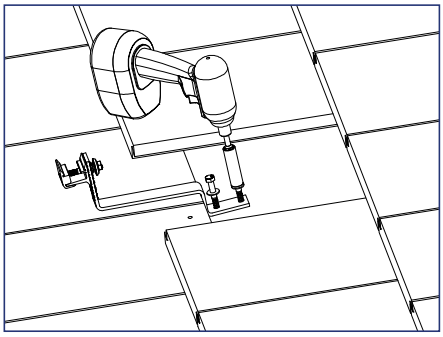

4) Attach the base with (2) 5/16" lag screws, drive lag screws for minimum 2.5" embedment into the roof framing member.

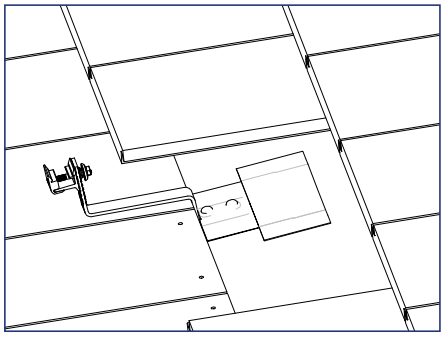

5) If deck level flashing is required, install flexible flashing per the following instructions.

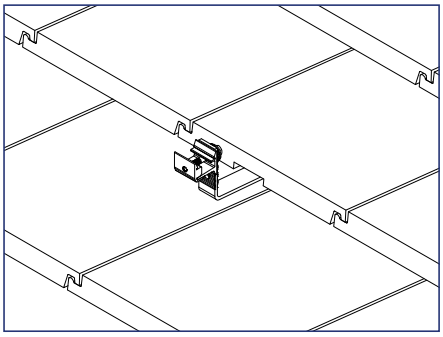

6) Replace tile

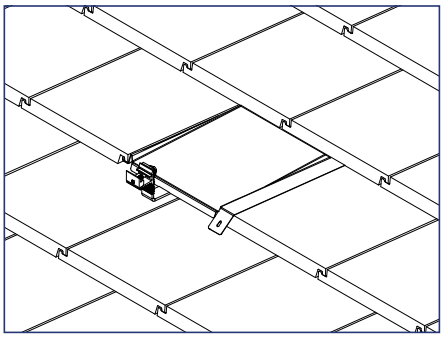

7) **OPTIONAL:** Install Tile Replacement flashing in place of roof tile over tile hook.

Best Practice:
Mold or slightly trim flashing around hook to achieve desired fitment.

Required Tools

- Hammer or Stud Finder
- Roof Marking Crayon
- Drill with 3/16” Pilot Drill Bit
- Roof Sealant
- Torque Wrench
- Socket Wrench
- 1/2” Socket
- Flat Pry Bar
- Tape Measure

Materials Included - Ultra Rail Tile Hook WS

1. (1) SnapNrack Ultra Rail Tile Hook WS
2. (1) 5/16”-18 x 1-3/4” SS Flange Bolt
3. SnapNrack Ultra Mount Spring Cage
4. (1) SnapNrack Ultra Mount Spring
5. (1) SnapNrack Ultra Mount (Thru-Hole)
6. (1) SnapNrack Ultra Mount (Tapped)

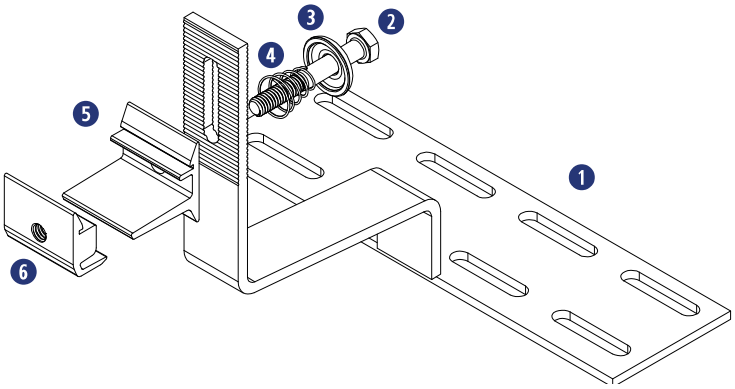

Other Materials Required (Not Shown)

1. (2) 5/16” Lag Screw
2. (2) 5/16” Washer
3. Flexible Flashing (when required for deck level flashing)

Application Note:

Install on W and S style concrete tile roofs.

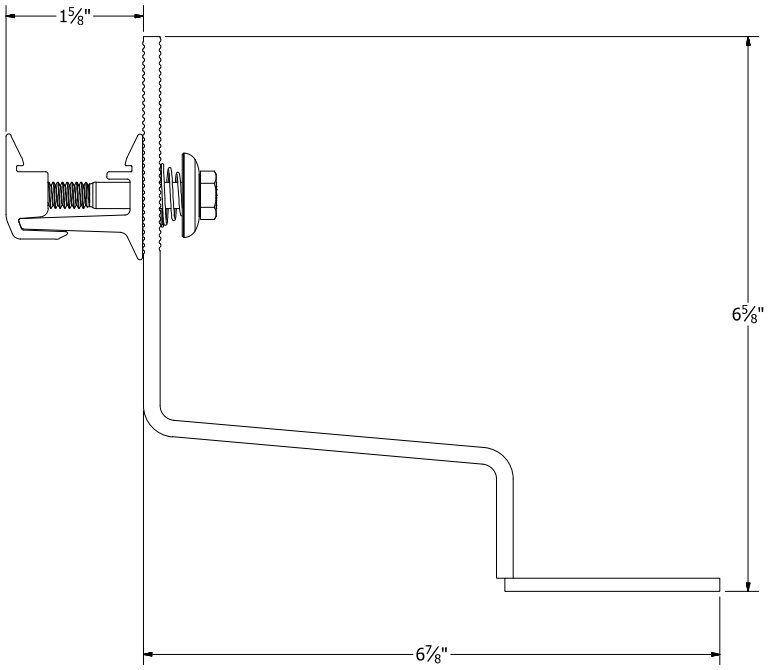

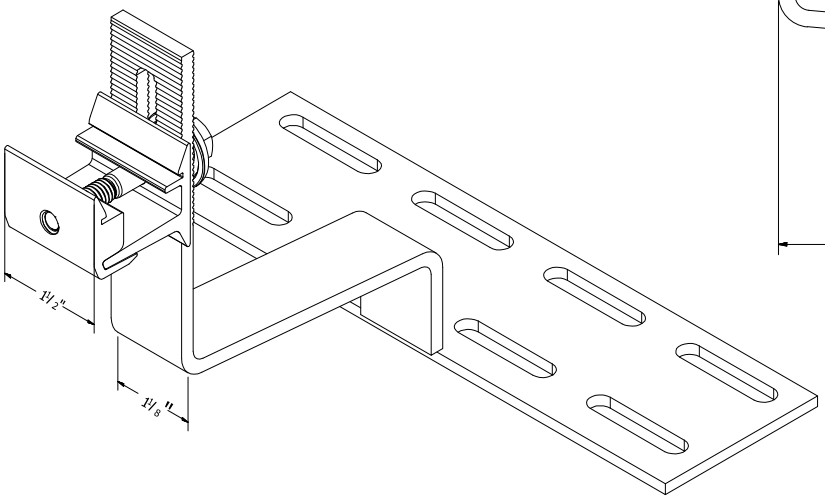

Dimensioned Ultra Rail Tile Hook WS Assembly

INSTALLATION INSTRUCTIONS

1) Using roof attachment locations drawn during system layout, remove roof tile where the roof attachment will be installed.

Install Note:
A neighboring tile may need to be removed to attach to the roof framing member and line up hook with the tile.

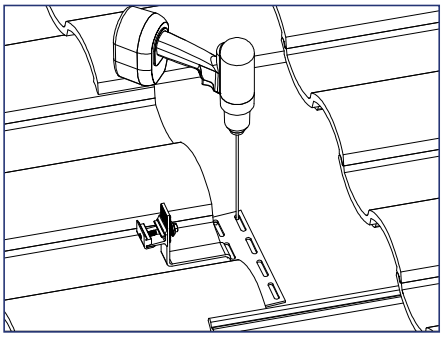

2) Align the base over the rafter so the hook can enter at the valley of a tile (W and S Tile). Drill two pilot holes through the roofing material into the roof framing member.

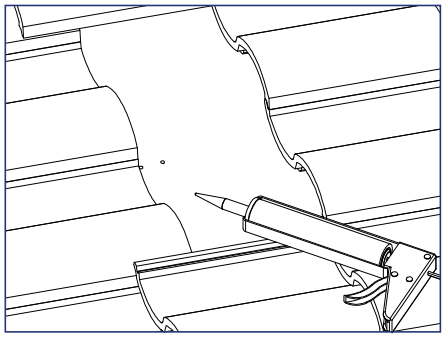

3) Apply roofing sealant to pilot holes and Tile Hook base.

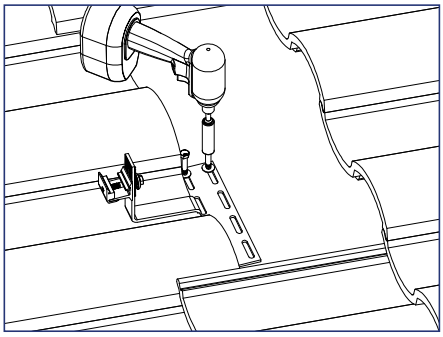

4) Attach the base with (2) 5/16" lag screws, drive lag screws for minimum 2.5" embedment into the roof framing member.

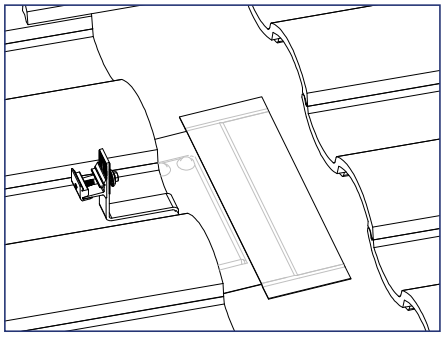

5) If deck level flashing is required, install flexible flashing per the following instructions.

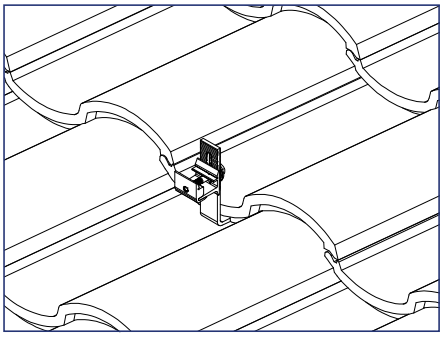

6) Replace tile

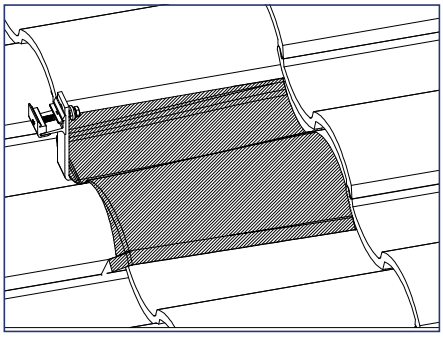

7) **OPTIONAL:** Install Tile Replacement flashing in place of roof tile over tile hook.

Best Practice:
Mold or slightly trim flashing around hook to achieve desired fitment.

Adjustable Tile Hook

Required Tools

- Hammer or Stud Finder
- Roof Marking Crayon
- Drill with 3/16” Pilot Drill Bit
- Roof Sealant
- Torque Wrench
- Socket Wrench
- 1/2” Socket
- Flat Pry Bar
- Tape Measure

Materials Included - Ultra Rail Adjustabe Tile Hook

1. (1) 5/16”-18 SS Flange Nut
2. SnapNrack Adjustable Tile Hook Base
3. SnapNrack Adjustable Tile Hook Arm
4. 5/16"-18 x 3/4"SS Carriage Bolt
5. 5/16"-18 x 3/4"SS Carriage Bolt
6. SnapNrack Ultra Mount Spring Cage
7. (1) SnapNrack Ultra Mount Spring
8. (1) SnapNrack Ultra Mount (Thru-Hole)
9. (1) SnapNrack Ultra Mount (Tapped)

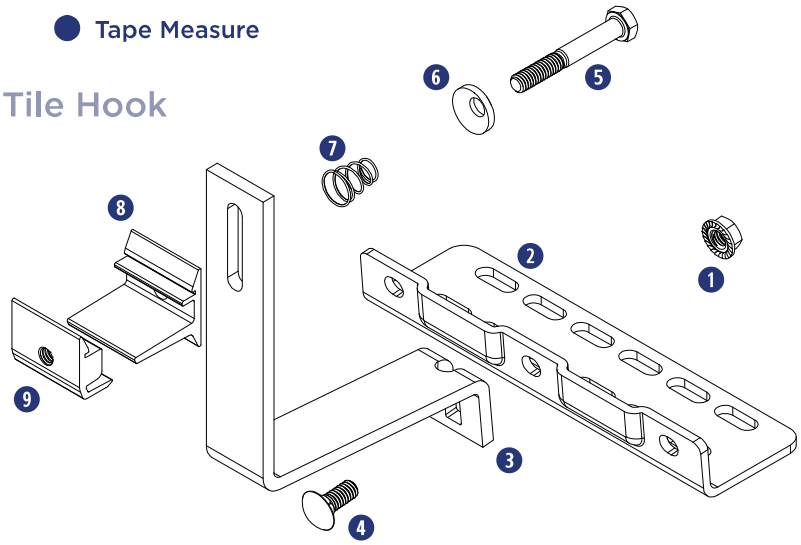

Application Note:

Install on W, S, and Flat style concrete tile roofs.

Other Materials Required (Not Shown)

1. (2) 5/16” Lag Screw
2. (2) 5/16” Washer
3. Flexible Flashing (when required for deck level flashing)

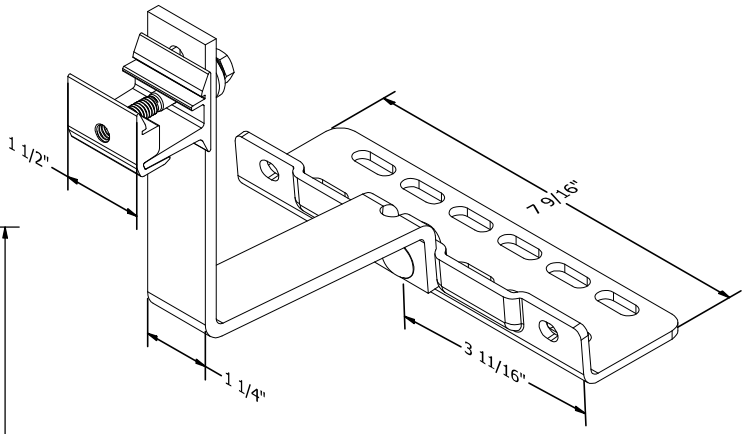

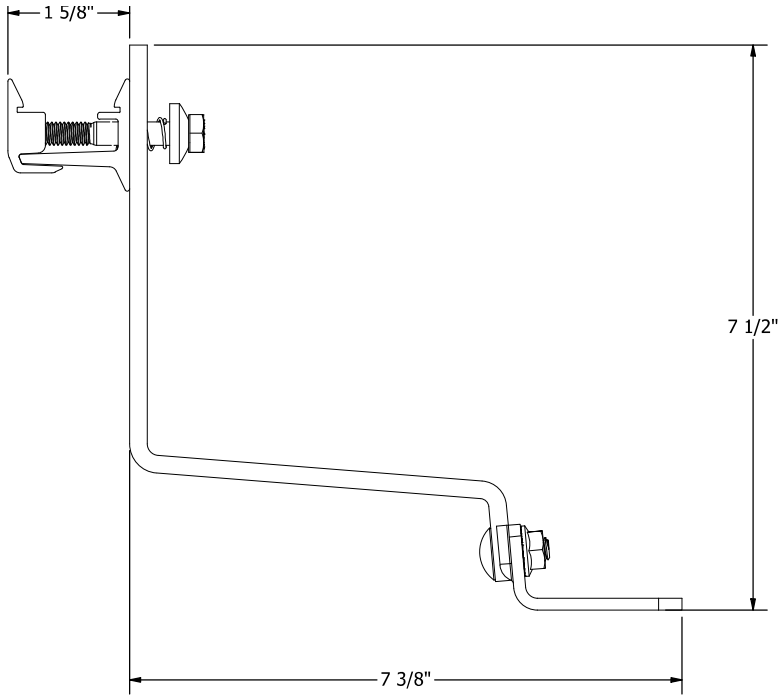

Dimensioned Ultra Rail Adjustable Tile Hook Assembly

INSTALLATION INSTRUCTIONS

1) Using roof attachment locations drawn during system layout, remove roof tile where the roof attachment will be installed.

Install Note:
A neighboring tile may need to be removed to attach to the roof framing member and line up hook with the tile.

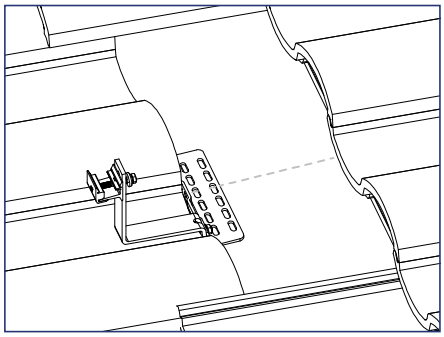

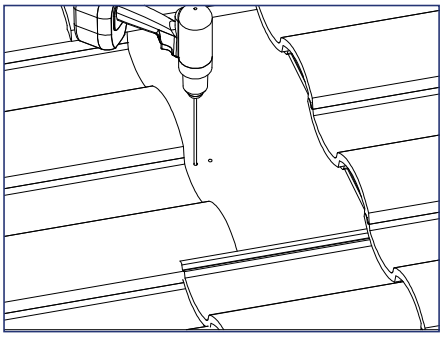

2) Align the base over the rafter so the hook can enter at the valley of a tile (all curved tile). Depending on rafter location, the hook may need to be relocated to one end of the base. Remove the nut, relocate the hook, and bolt to an end position, thread the nut back on the bolt.

3) Drill two pilot holes through the roofing material into the roof framing member.

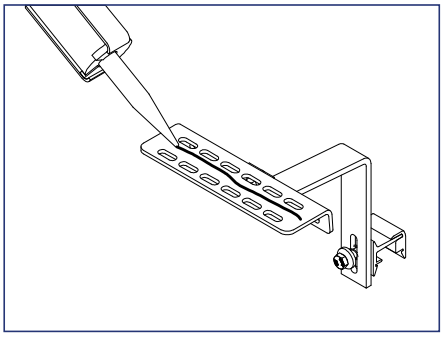

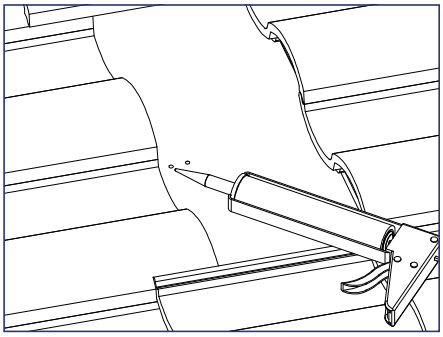

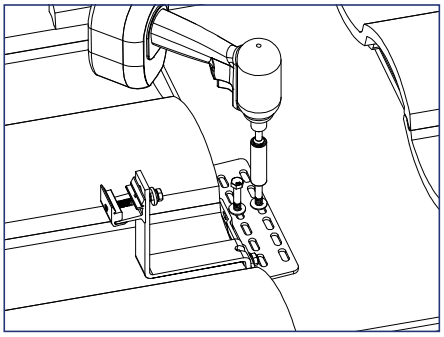

4) Apply roofing sealant to pilot holes and Tile Hook base.

5) Attach the base with (2) 5/16" lag screws, drive lag screws for minimum 2.5" embedment into the roof framing member.

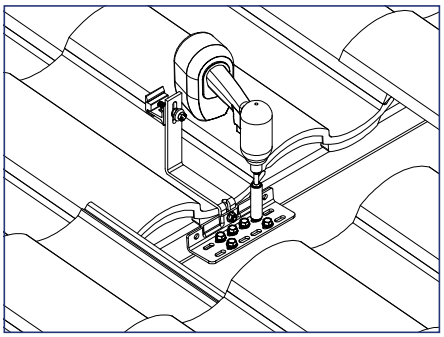

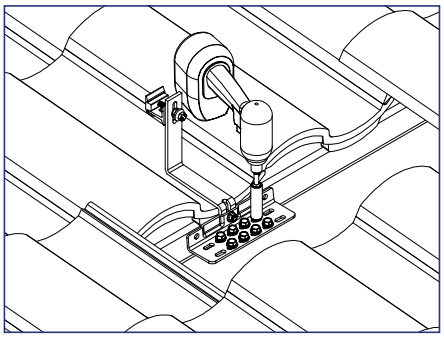

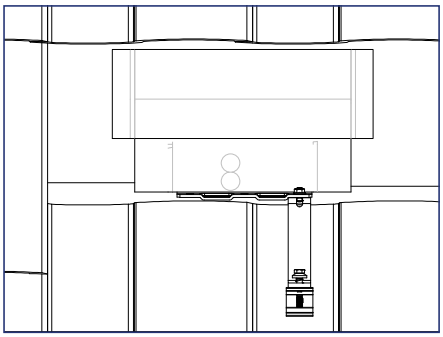

6) **OPTIONAL: If deck mounted attachment is needed, apply roofing sealant to the hook base and position over decking in desired location.**

7) OPTIONAL: Drive (6) or (8) #14 Sealing Washer Wood Screws in correct mounting holes. (4) Wood screws must be used next to the hook. the remaining (2) or (4) wood screws to be installed as shown. Install note: Hook base can be installed with (8) #14 Sealing Washer Wood Screws in corresponding mounting holes. screws to be installed as shown.

8) OPTIONAL: If deck level flashing is required, install flexible flashing per the following instructions.

Best Practice:
Mold or slightly trim flashing around hook to achieve desired fitment.

INSTALLATION INSTRUCTIONS

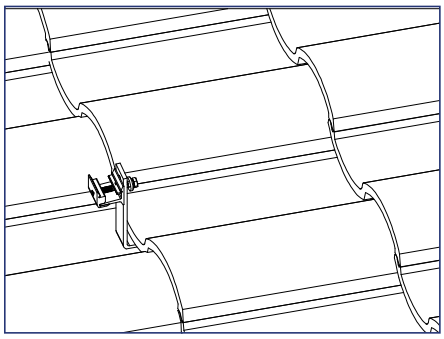

9) Using roof attachment locations drawn during system layout, remove roof tile where the roof attachment will be installed.

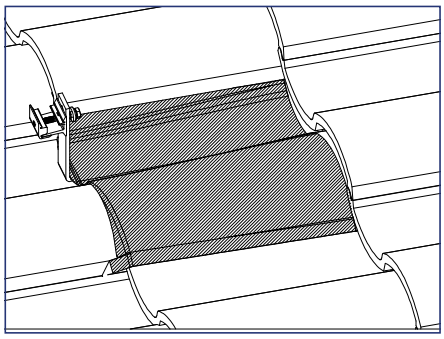

10) OPTIONAL: Install Tile Replacement flashing in place of roof tile over tile hook. Flat, W, and S, tile replacements are available.

Best Practice:

Mold or slightly trim flashing around hook arm to achieve desired fitment.

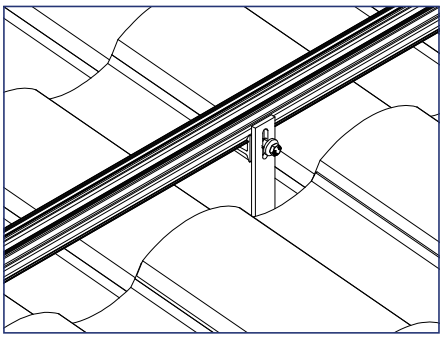

11) Install SnapNrack Ultra Rail directly to the Ultra Rail Mounting Hardware, level rails and tighten to 12 ft lbs.framing member.

INSTALLATION INSTRUCTIONS - Optional Deck Level Flashing

1) Prepare the underlayment surface for adhesion.

Best Practice:

The surface should be dry, clean and free of any dirt, dust or foreign matter that may prevent adhesion. Clean the surface around the Tile Replacement Base with a brush of medium-stiff bristles. If necessary, prime the surface with compatible spray or paint primer.

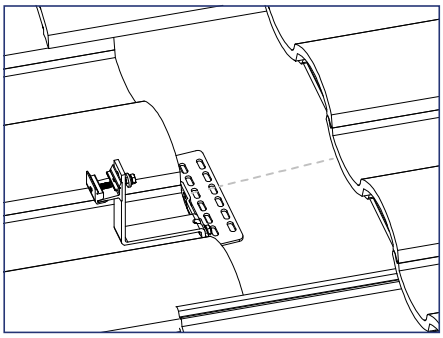

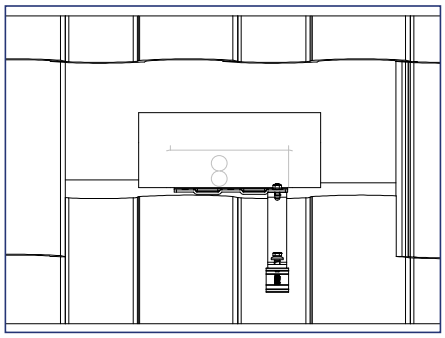

2) Peel off the backing from a 5”x13” strip of flexible flashing. Apply the strip centered laterally over the base and abutted to the Tile Hook arm. Press and roll out any creases or air bubbles with a roller to maximize contact of the flashing adhesive to 100% of the surface and base.

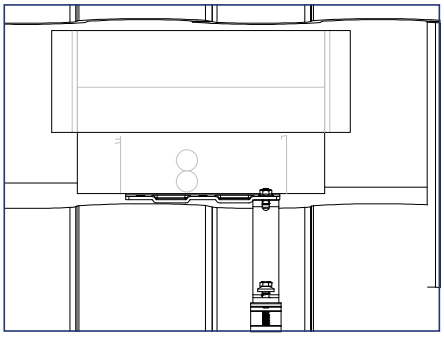

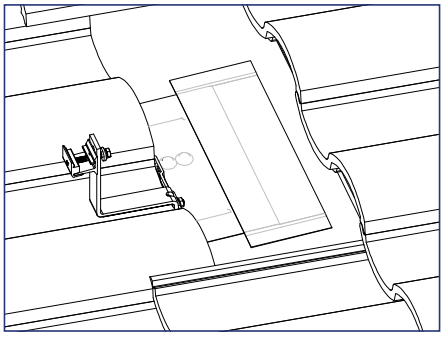

3) Peel off the backing and apply the second 4”x17” strip of flexible flashing along the top edge of the first strip with a 2” lap on either edge, then roll out any creases between the strip and the deck level surface.

Install Note:

SnapNrack recommends using Protecto Wrap Protecto Seal 45 waterproofing membrane, or equivalent, as the flexible flashing and lap material.

Install Note:

SnapNrack recommends testing underlayment surfaces for adhesion. If adhesion is found to be marginal, then an adhesive primer is recommended to ensure optimal adhesion. To apply spray adhesive primer:

Ensure surface is dry, clean, and free of anything that may prevent adhesion

Shake can of adhesive before use

Apply a uniform coat of adhesive to surface being treated

Allow surface to dry for 2 minutes (no more than 10 minutes) before applying flashing

Never cover wet adhesive

Metal Roof Base

Required Tools

- Hammer Or Stud Finder
- Roof Marking Crayon
- Drill with 3/16" Pilot Drill Bit
- Torque Wrench
- Socket Wrench
- 1/2" Socket

Materials Included - Metal Roof Base

1. (1) SnapNrack Metal Roof Base
2. (1) SnapNrack All Purpose L Foot
3. (1) 5/16"-18 SS Flange Nut
4. (1) SnapNrack Ultra Mount (Tapped)
5. (1) SnapNrack Ultra Mount (Thru-Hole)
6. (1) SnapNrack Ultra Mount Spring
7. (1) SnapNrack Ultra Mount Spring Cage
8. (1) 5/16"-18 X 2-1/4" SS HCS Bolt

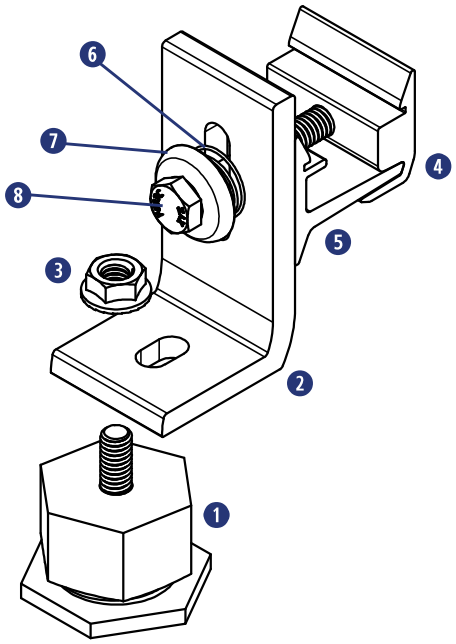

Other Materials Required - *Not Shown*

① (1) 5/16" Lag Screw or 1/4" Self-Drilling Screw

② (1) 5/16" or 1/4" Washer (3/4" max O.D.)

Application Note:
Install on metal roof profiles with flat surface large enough to accommodate 1-5/8" wide base

Installation Note:
Grounding and bonding of mounting system to metal roof panels shall meet local AHJ requirements.

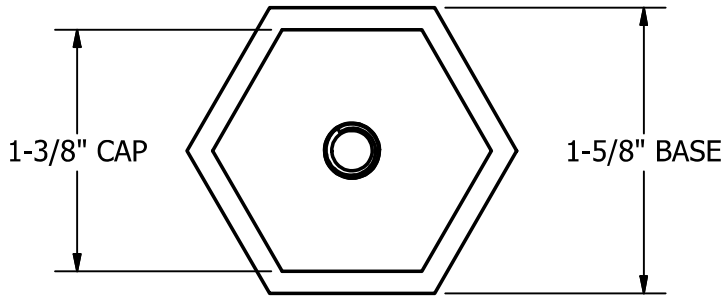

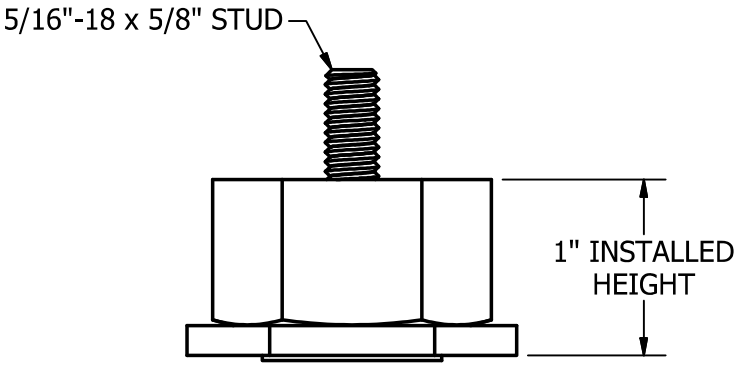

Dimensioned Metal Roof Base Assembly

INSTALLATION INSTRUCTIONS

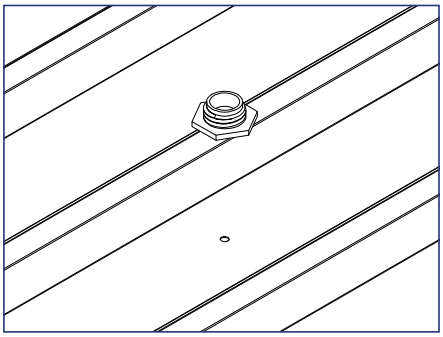

1) Using roof attachment locations drawn during system layout, drill a pilot hole through the roofing material into the roof framing member.

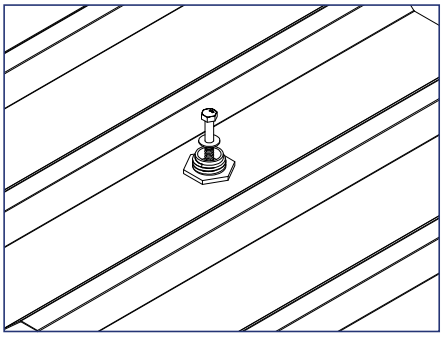

2) Attach the base with 5/16" lag screw (or 1/4" self-drilling screw for metal structures), drive screw for minimum 2.5" embedment into the roof framing member.

Install Note:

Ensure area is free from metal shavings and debris before installing Metal Roof Base. Metal roofs with excessive debris, corrosion, or non-factory coating should be evaluated for adequate sealing surface.

Additional roof sealant not required but can be applied after tightening the Metal Roof Base to roof, if desired.

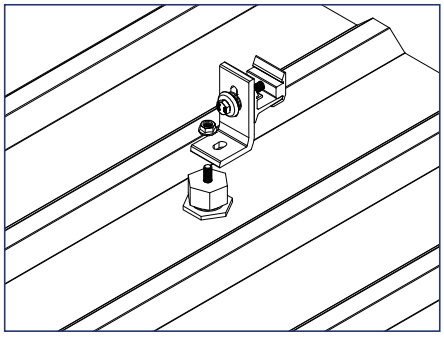

3) Thread Metal Roof Base cap onto Metal Roof Base bottom, ensuring cap is fully seated to base.

Install Note:

Take care to ensure the base does not twist when cap is tightened.

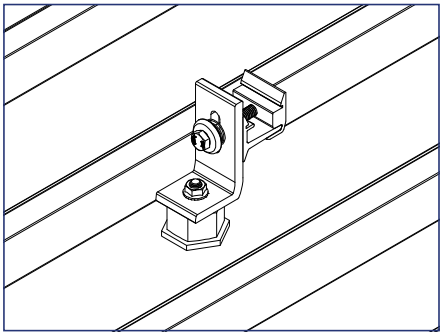

4) Attach L Foot to stud in Metal Roof Base cap and tighten hardware to 10 ft-lbs.

Best Practice:

Finish tightening hardware with a hand wrench to prevent L Foot from rotating.

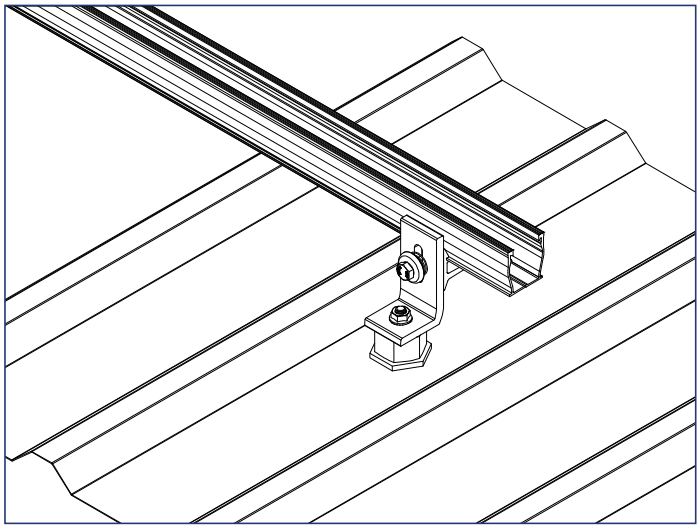

Seam Clamp

Required Tools

- Torque Wrench
- Socket Wrench
- 1/2" Socket

Materials Included - Wide Base Seam Clamp Kit

1. (1) 5/16"-18 X 1-1/2" SS HCS Bolt (Black)
2. (1) 5/16" SS Split Lock Washer
3. (1) SnapNrack Seam Clamp Insert
4. (1) SnapNrack Seam Clamp Cam
5. (1) SnapNrack Seam Clamp Wide Base
6. (1) SnapNrack All Purpose L Foot
7. (1) SnapNrack Rotation Lock
8. (1) SnapNrack Ultra Mount (Tapped)
9. (1) SnapNrack Ultra Mount (Thru-Hole)
10. (1) SnapNrack Ultra Mount Spring
11. (1) SnapNrack Ultra Mount Spring Cage
12. (1) 5/16"-18 X 2-1/4" SS HCS Bolt

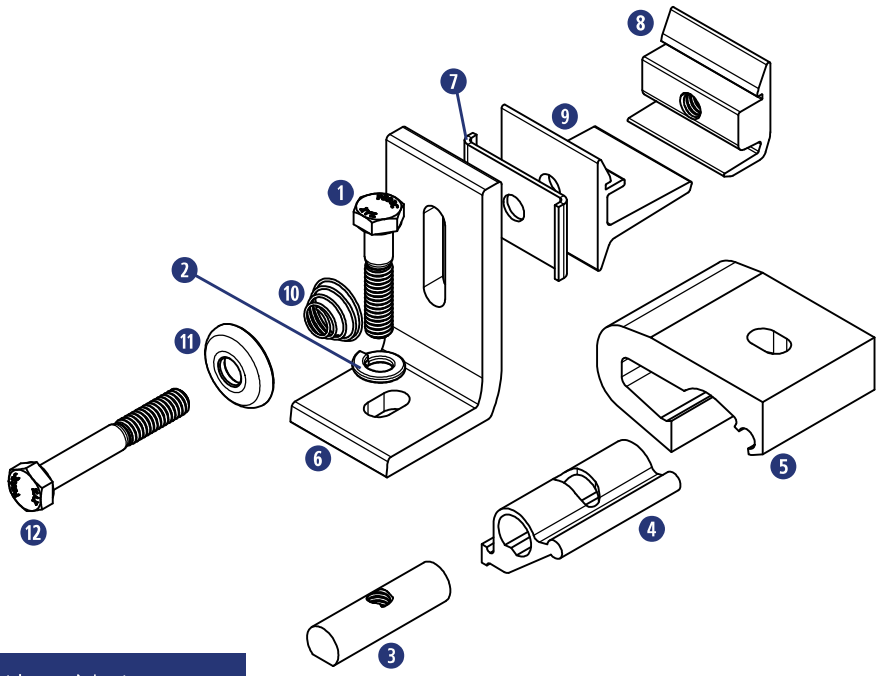

Application Note:
Install on standing metal seam roofs

Installation Note:
Grounding and bonding of mounting system to metal roof panels shall meet local AHJ requirements.

INSTALLATION INSTRUCTIONS

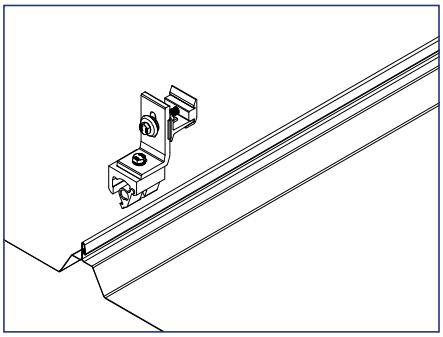

1) Loosen seam clamp hardware and use roof attachment locations to lay out seam clamps on roof.

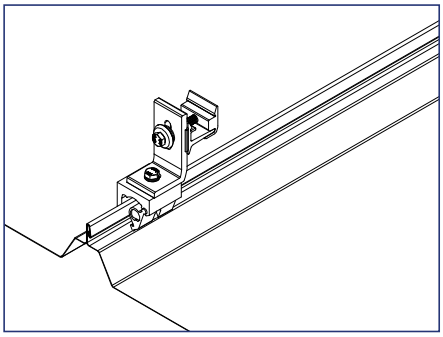

2) Attach the seam clamp to the standing metal seam by opening the seam clamp cam and placing the clamp over the top of the standing metal seam.

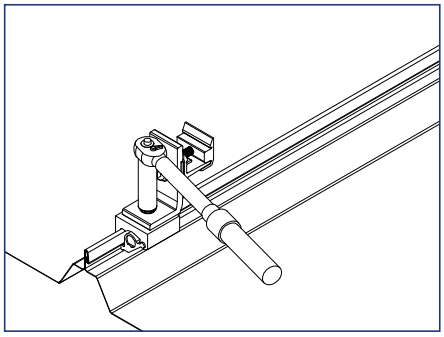

3) Torque black seam clamp bolt to 15-16 ft-lbs.

Install Note:

Seam clamps should never be installed using an impact driver.

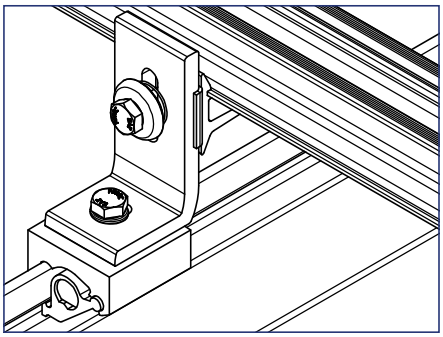

4) Ensure rotation lock is properly aligned with Ultra Mount and L foot during rail installation.

SnapNrack Seam Clamps have been designed to work with a variety of standing seam metal roofs, the most common seam types are:

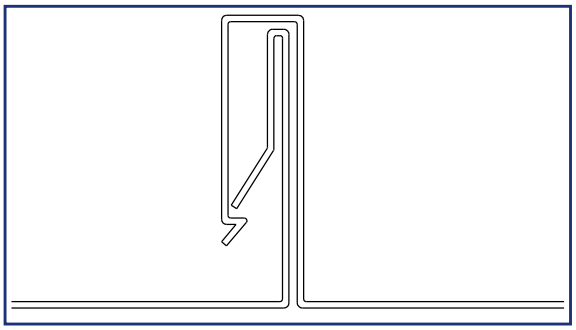

Snap Lock

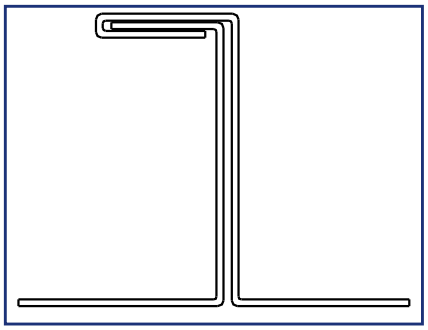

Single Lock

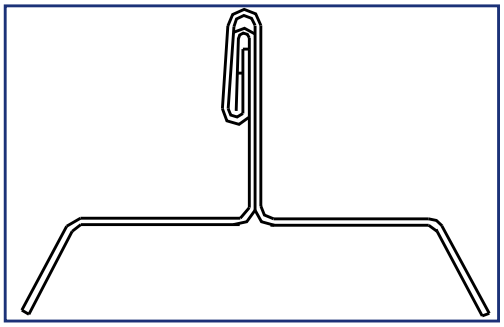

Double Lock

Install Note:

If a specific roof seam is not found on list, contact SnapNrack prior to installation.

Ultra Rail & S-5! CorruBracket

Required Tools

- Screw gun
- Torque Wrench with 1/2” Socket
- Socket Wrench with 1/2” Socket
- Tape Measure
- Rag
- Stringline

Materials Included - S-5! Corrubracket, L Foot with Ultra Rail Mounting Hardware

1. (1)SnapNrack Ultra Rail Mounting Hardware
2. (1)SnapNrack L Foot
3. (1) M8-1.25 x 16mm Hex Flange Bolt
4. (1) S-5! CorruBracket

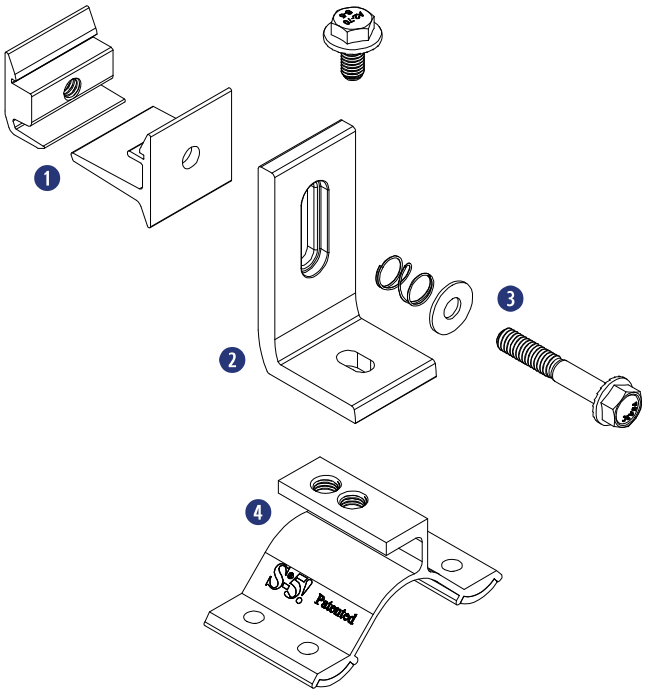

Other Materials Required

Use Proper Hardware
Only use appropriate screws and hardware when attaching this product into the supporting structure.

Metal to Metal Screw Specifications: 1/4-14 Self Drilling Screw - 1-1/2" to 2-1/2" Length - 3/8" Hex Washer Head - Zinc/Aluminum Cap

Metal to Wood Screw Specifications: 1/4-14 Type 17-AB Milled Point - 1-1/2" to 2-1/2" Length - 3/8" Hex Washer Head - Zinc/Aluminum Cap

Install Note:

S-5!® Warning!
Please use these products responsibly! Visit our website or contact your S-5! distributor for available load test results. The user and/or installer of these parts is responsible for all necessary engineering and design to ensure the CorruBracket has been properly spaced and configured.

Notice to S-5! users: Due to the many variables involved with specific panel products, climates, snow melt phenomena, and job particulars, the manufacturer cannot and does not express any opinions as to the suitability of any S-5! assembly for any specific application and assumes no liability with respect thereto. S-5! products are tested for ultimate holding strength on various profile types and materials. This information is available from the S-5! website: www.S-5.com. This document is an installation guide only and the photographs and drawings herein are for the purpose of illustrating installation, tools and techniques, not system designs. Information contained within is intended to apply to the document as a whole. The CorruBracket is made for corrugated roofing profiles. It is not made for folded seams and does not use setscrews. Screws used to secure the CorruBracket to roof and substrate will vary based upon specific project requirements and are not supplied by S-5!.

For more information see proper hardware below and please consult your S-5! distributor.

INSTALLATION INSTRUCTIONS

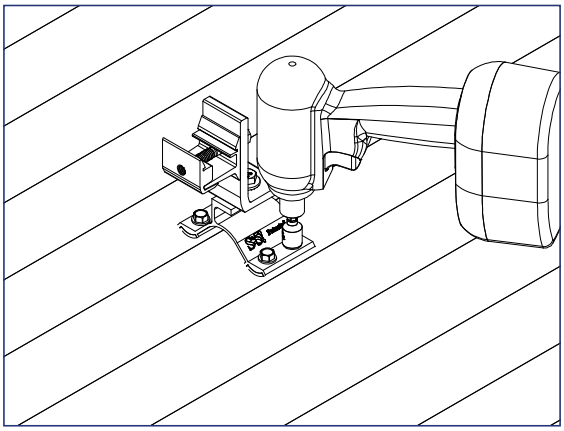

CorruBracket must be mounted directly over & into the supporting structure of the roof, i.e. wood decking, wood or steel purlins or trusses, NEVER into the metal roofing material alone.

1) Determine the location of the supporting structure of the roof. When possible, secure the CorruBracket using all hole locations; when not possible, always use the two upslope hole locations. The only surface preparation necessary is to simply wipe away excess oil and debris.

2) Peel the release paper from both bases, align, and apply to the clean area.

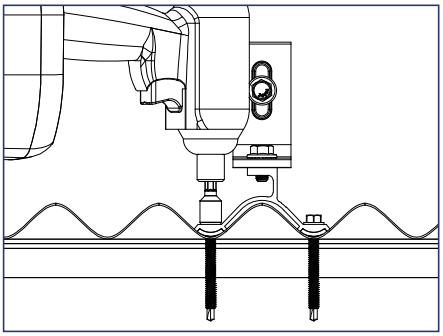

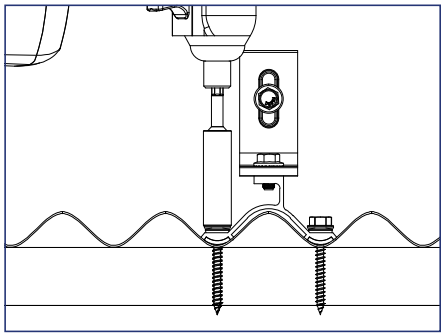

3) Secure the CorruBracket by drilling appropriate screws into the pre-punched holes and directly into the supporting structure of the roof.

CorruBracket Placement Tips

To ensure brackets are installed in a straight line, install a single CorruBracket on each end of the roof at a measured, consistent distance from the bottom edge of the roof. Use a string line between the two brackets. Mount the remaining CorruBracket along the string line, directly into the supporting structure of the roof.

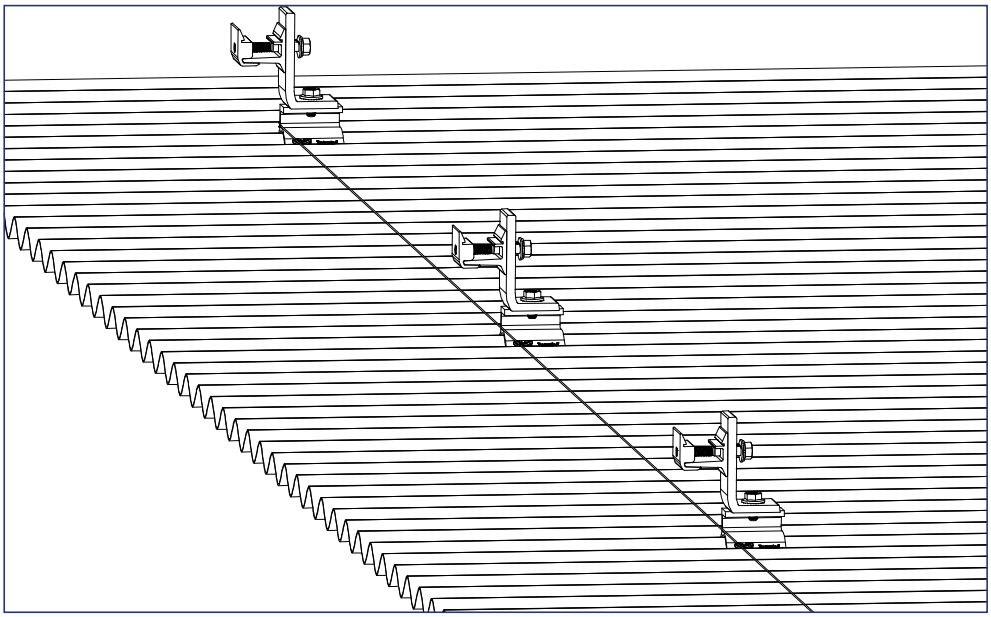

Ultra Rail & S-5! CorruBracket 100T

snapnrack.com

Required Tools

- Screw Gun or Bulb Rivet Gun
- Torque Wrench with 1/2" Socket
- Socket Wrench with 1/2" Socket
- Tape Measure
- String line
- Rag
- 5/16" (8mm) Socket

Materials Included - S-5! Corrubracket 100T, L Foot with Ultra Rail Mounting Hardware

1. (1)SnapNrack Ultra Rail Mounting Hardware
2. (1)SnapNrack L Foot
3. (1) M8-1.25 x 16mm Hex Flange Bolt
4. (1) M8-1.25 Hex Flange Nut
5. S-5! CorruBracket 100T
6. (4) 1/4" (6.3mm) Dia. x 1" (25mm) Long - 5/16" (8mm) Hex head with EPDM rubber sealing washer

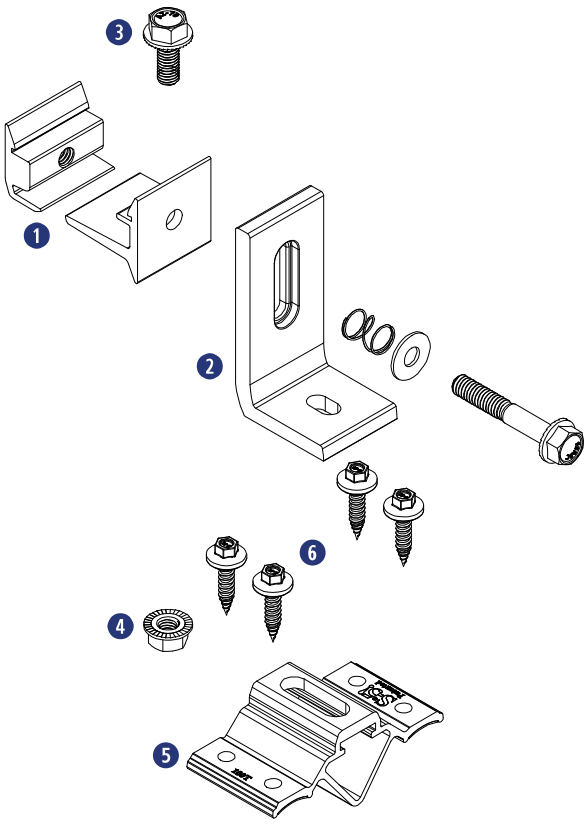

Other Materials Required

Use Proper Hardware
Only use appropriate screws and hardware when attaching this product to the roof sheeting or directly into the supporting structure.

Sheeting Only

Not Provided

Rivet Specifications: 9/32" (7.7mm) Diameter - Alu/Alu Flat Head Bulb-Tite Rivet with 5/8" (16mm) EPDM Washer Grip: 0.032" - 0.375" / 0.8mm - 9.5mm

Supporting Structure

Not Provided

Metal to Metal Screw Specifications: 1/4-14 Self Drilling Screw - 2" Length - 3/8" Hex Washer Head - Zinc/ Aluminum Cap

Install Note:

S-5!® Warning!
Please use these products responsibly! Visit our website or contact your S-5! distributor for available load test results. The user and/or installer of these parts is responsible for all necessary engineering and design to ensure the CorruBracket 100T has been properly spaced and configured.

Notice to S-5! users: Due to the many variables involved with specific panel products, climates, snow melt phenomena, and job particulars, the manufacturer cannot and does not express any opinions as to the suitability of any S-5! assembly for any specific application and assumes no liability with respect thereto. S-5! products are tested for ultimate holding strength on various profile types and materials. This information is available from the S-5! website: www.S-5.com. This document is an installation guide only and the photographs and drawings herein are for the purpose of illustrating installation, tools and techniques, not system designs. Information contained within is intended to apply to the document as a whole. CorruBracket 100T is mounted directly into the crest of the corrugation with the recommended sheet metal screws or bulb rivets, or can be mounted directly over and into the supporting structure of the roof, i.e. wood decking, wood or steel purlins, or trusses.

INSTALLATION INSTRUCTIONS - Attaching to Roof Sheathing

1) The only surface preparation necessary is to simply wipe away excess oil and debris.

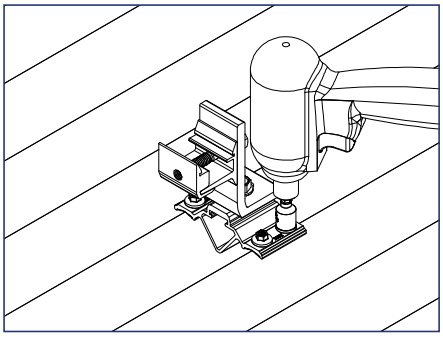

Install Note:

Do not over-drive fasteners; a slight extrusion of rubber around the washer is a good visual-tightness check. If a fastener has been stripped due to over-driving, it is important to remove the fastener and replace it with a bulb rivet or larger diameter fastener. To avoid stripping, use screw gun with depth-sensing nose piece or adjustable torque clutch.

2) Secure the CorruBracket 100T directly into the crown of the roof profile with the recommended screws via the pre-punched holes, or by pre-drilling the proper-sized hole in the sheeting through the pre-punched holes and riveting with bulb-type rivets (as per rivet manufacturers installation instructions). To achieve tested holding strength, secure the CorruBracket 100T by using all of the pre-punched hole locations. Drive fasteners until washers are adequately seated and sealed.

INSTALLATION INSTRUCTIONS - Attaching to Supporting Structure

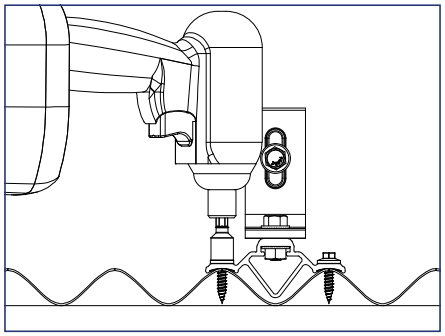

3) Determine the location of the supporting structure of the roof. When possible secure the CorruBracket 100T using all of the pre-punched hole locations; when not possible, always use the two upslope hole locations. The only surface preparation necessary is to simply wipe away excess oil and debris.

Install Note:

Do not over-drive fasteners; a slight extrusion of rubber around the washer is a good visual-tightness check.

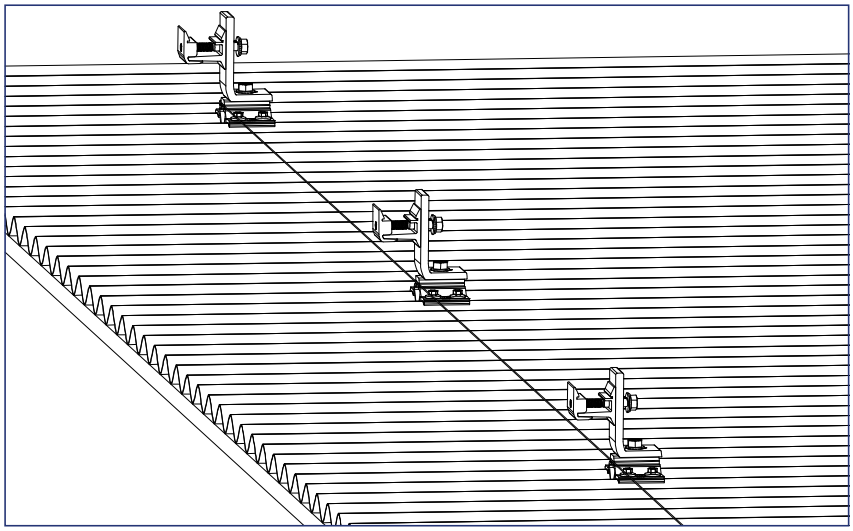

CorruBracket 100T Placement Tips

a) Horizontal bracket alignment

To ensure brackets are installed in a straight line when desired, install a single CorruBracket 100T on each end of the roof at a measured, consistent distance from the bottom edge of the roof. Use a string line between the two brackets. Mount the remaining CorruBracket 100T along the string line, directly into the roof.

b) Upslope bracket spacing

For upslope bracket spacing techniques reference the S-5! website at www.S-5.com.

Ultra Rail & S-5! ProteaBracket

Required Tools

- Screw gun
- 5/16" (7,7 mm) Drive Socket
- Stringline
- Torque Wrench with 1/2" Socket
- Tape Measure
- 5/16" (8mm) Socket
- Socket Wrench with 1/2" Socket
- Rag

Materials Included - S-5! ProteaBracket, with Ultra Rail Mounting Hardware

1. (1)SnapNrack Ultra Rail Mounting Hardware
2. (1) M8-1.25 x 16mm Carriage Bolt
3. (1) M8-1.25 Hex Flange Nut
4. (1) S-5! ProteaBracket
5. (4) 1/4" (6.3mm) Dia. x 1" (25mm) Long - 5/16" (8mm) Hex head with EPDM rubber sealing washer

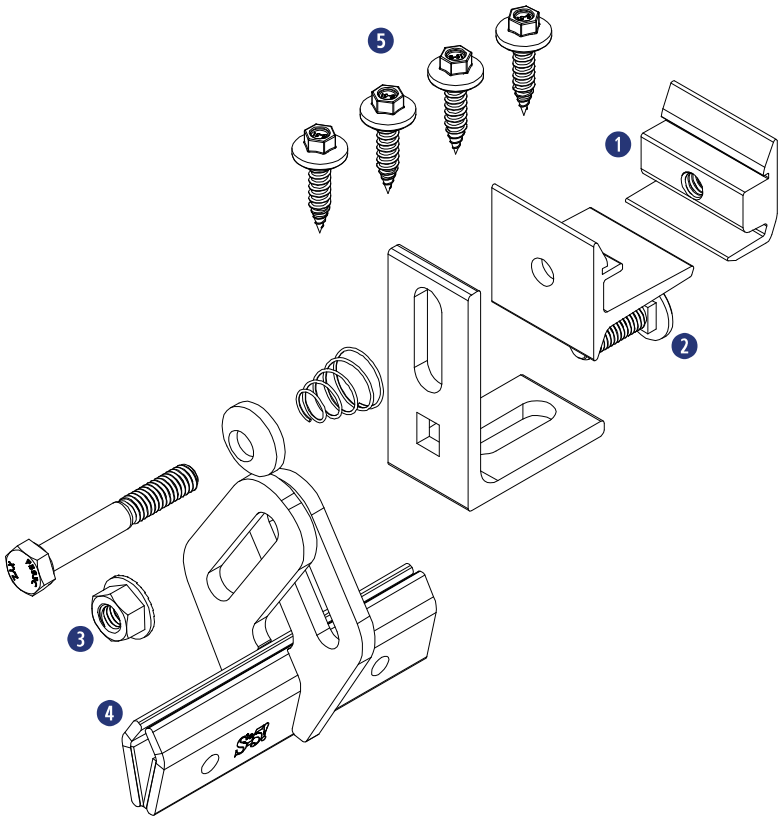

Other Materials Required

Use Proper Hardware

ProteaBracket is mounted directly onto the crown of the trapezoidal sheet using the stainless steel cap screws (provided) or Bulb-Tite rivets (not provided).

Provided

Screw Specifications:
1/4" (6.3 mm) Diameter - 1" (25 mm) Length - 5/16" (8 mm) Hex head with EPDM rubber sealing washer

Not Provided

Rivet Specifications:
9/32" (7.7 mm) Diameter - Alu/Alu Flat Head Bulb-Tite Rivet with 5/8" (16 mm) EPDM Washer Grip: 0.032" / 0.8 mm - 9.5 mm

Install Note:

Attention! This document is a guide only. This product may not be suitable for every application. The user is responsible for all necessary applications engineering and design.

You can also view load test results at www.s-5.com where applicable, or contact your S-5! distributor for more information.

INSTALLATION INSTRUCTIONS

Install Note:

ProteaBracket is designed to fit most trapezoidal sheet shapes.

Caution is advised for rail-mounted PV installations in snow country.

1) Determine the location of assembly. Wipe away excess oil and dirt from panel surface.

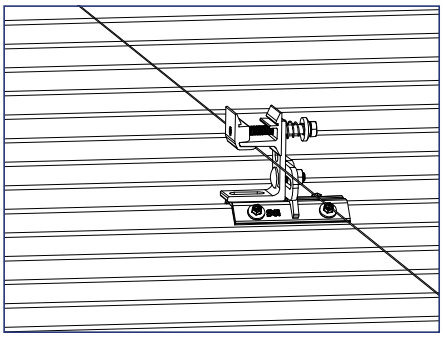

2) To ensure brackets are correctly aligned, install a single ProteaBracket on each end of the roof at a measured, consistent distance from the bottom edge of the roof. Use a string line between the two brackets. Mount the remaining ProteaBrackets along the string line. For upslope bracket-spacing techniques, reference the S-5! website at www.S-5.com.

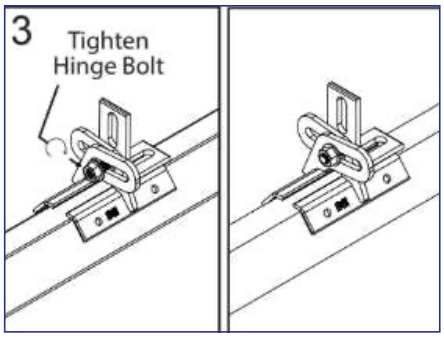

3) Before removing the protective paper over the EPDM pad, place ProteaBracket onto the panel rib and hand-tighten the hinge bolt to customize the bracket's proper fit. Because ProteaBracket is reversible, be sure all brackets on the same row have the L-foot in the same orientation and face the same way. Align carefully, peel the protective paper off the EPDM pad and adhere the bracket to the roof.

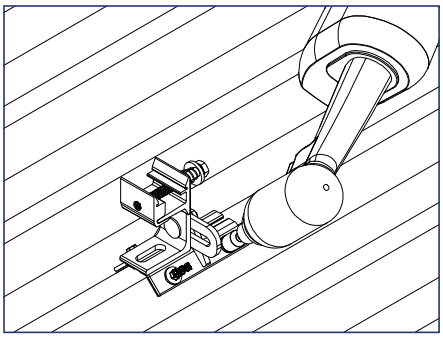

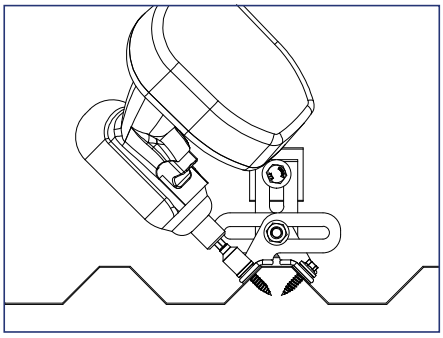

4) To secure ProteaBracket into the rib of the roof profile, alternate the provided screws through the pre-punched holes. Use all four pre-punched hole locations to achieve tested holding strength. Be careful not to over tighten the screws: a slight compression extrusion of rubber around the washer is a good visual check. If a fastener has been stripped, it is important to remove the fastener and replace it with a waterproof bulb rivet. To avoid stripping, use a screw gun with depth-sensing nose piece or an adjustable torque clutch. Lastly, hold the end or slotted L-flange straight and firmly in place while using the open socket wrench to tighten the hinge bolt to the specified torque.

Required Tools

- Screw Gun
- Socket Wrench with 1/2" Socket
- T30 Torx Bit Tip
- Tape Measure
- Torque Wrench with 1/2" Socket
- Stringline

Materials Included - S-5-N Mini, L Foot with Ultra Rail Mounting Hardware

1. (1) SnapNrack Ultra Rail Mounting Hardware
2. (1)SnapNrack L Foot
3. (1) M8-1.25 x 16mm Hex Flange Bolt
4. (1) S-5-N Mini

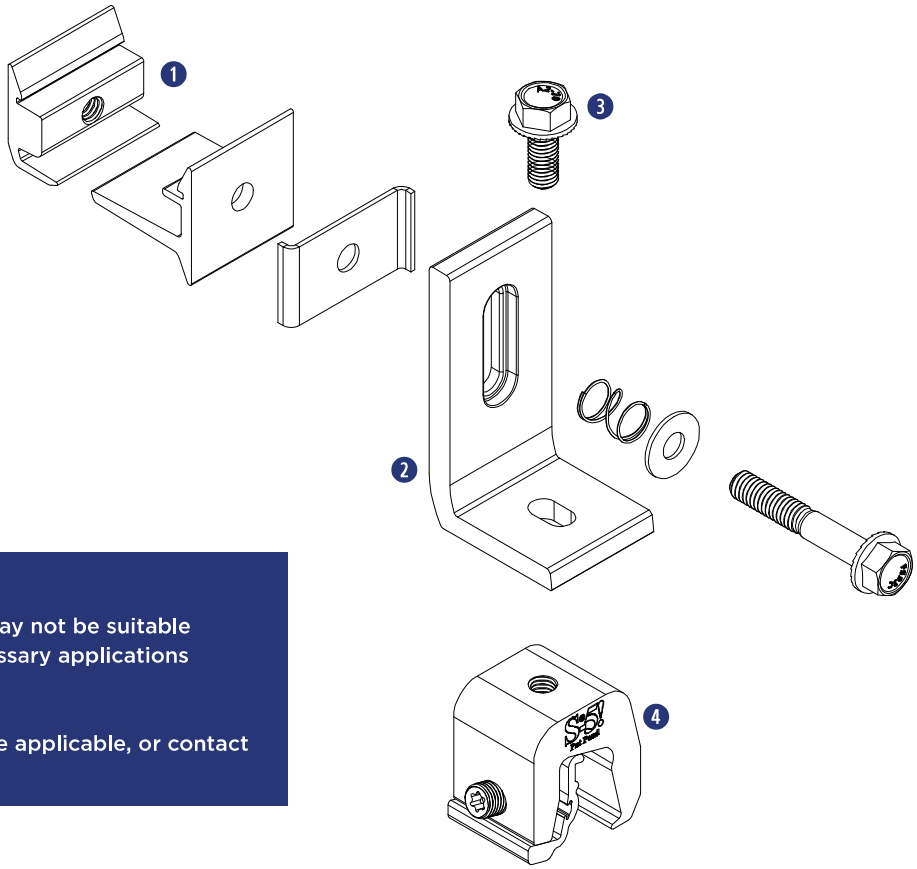

Install Note:

Attention! This document is a guide only. This product may not be suitable for every application. The user is responsible for all necessary applications engineering and design.

You can also view load test results at www.s-5.com where applicable, or contact your S-5! distributor for more information.

INSTALLATION INSTRUCTIONS

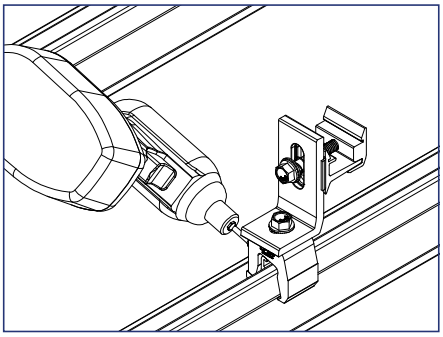

1) Position clamp and insert at desired location along the seam as shown.

Install Note:

On wider panel profiles, it may be necessary to place the clamp onto the seam first and then slide the insert into it. Seams that exceed maximum allowance of 0.82" at the widest part of the seam may require hand crimping to facilitate clamp fit.

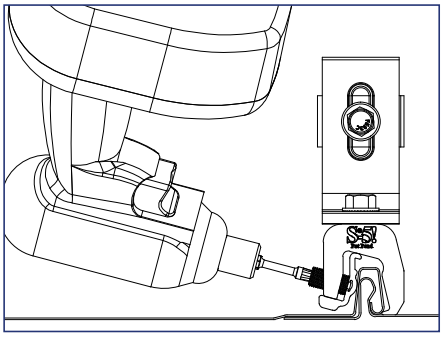

2) The clamp should be over the seam and insert as shown. Make sure the toe of the clamp engages beneath the fold of the seam as shown.

3) Tighten the setscrew. When relying on published load values, setscrew tension should be verified periodically using a dial-indicating calibrated torque wrench to ensure the tool is consistently achieving the recommended torque range (Table 1 below).

Install Note:

When installing the S-5-N Mini clamp: The seam material will compress evenly during the first tightening.

Once installed correctly, the mechanical interlock is established and these clamps require no maintenance or torque re-inspection for the life of the roof.

Table 1

Specified Torque	Inch Pounds	Foot Pounds	Nm
Setscrew on 22ga (0.8 mm) steel	160-180	13-15	18-20
Setscrew on 24ga (0.6 mm) steel and all other materials	130-150	11-12.5	15-17
M8 Hex Flange bolt	160	13	18

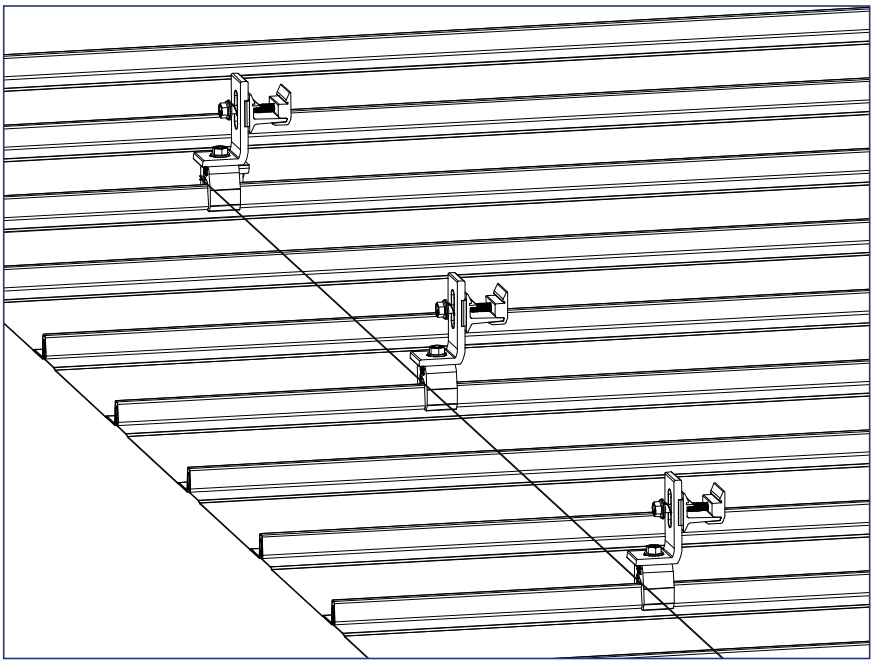

S-5-N Mini Placement Tips

To ensure brackets are installed in a straight line when desired, install a single S-5-N Mini on each end of the roof at a measured, consistent distance from the bottom edge of the roof. Use a string line between the two brackets. Mount the remaining brackets along the string line, directly onto the seam.

Ultra Rail & S-5! SolarFoot

Required Tools

- Screw gun
- 3/8" Hex Socket Drive
- Stringline
- Torque Wrench with 1/2" Socket
- Tape Measure
- Socket Wrench with 1/2" Socket
- Rag

Materials Included - S-5! SolarFoot, L Foot with Ultra Rail Mounting Hardware

1. (1) SnapNrack Ultra Rail Mounting Hardware
2. (1)SnapNrack L Foot
3. (1) M8-1.25 Hex Flange Nut
4. (1) S-5! SolarFoot

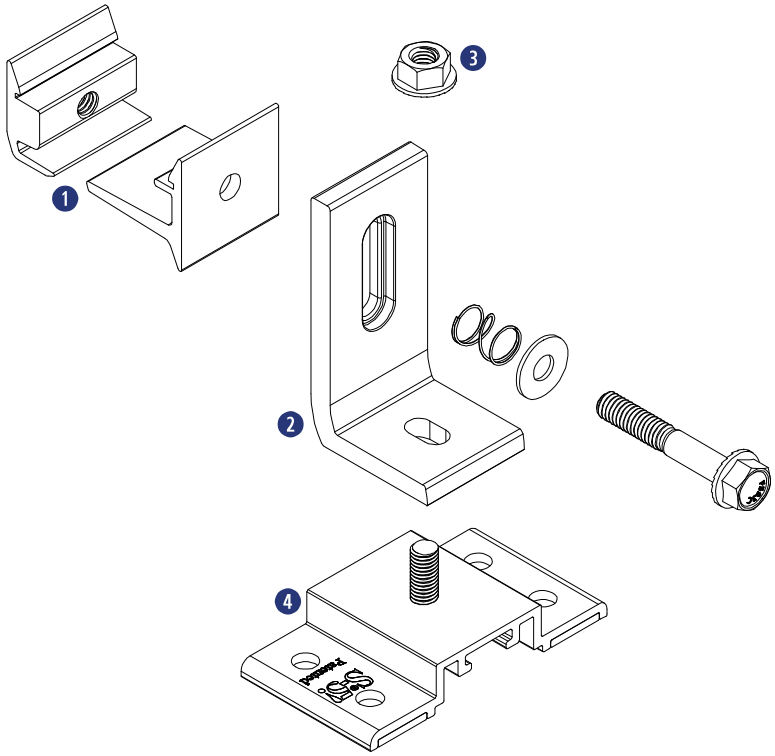

Other Materials Required

Fastener Selection

Fastener selection will depend on whether the supporting structure of the roof is metal or wood. When relying upon tested load values one of the below fasteners MUST be used.

Not Provided

Metal to Metal Screw Specifications: 1/4-14 Self Drilling Screw - 1-1/2" to 2-1/2" Length - 3/8" Hex Washer Head - Zinc/Aluminum Cap

Not Provided

Metal to Wood Screw Specifications: 1/4-14 Type 17-AB Milled Point - 1-1/2" to 2-1/2" Length - 3/8" Hex Washer Head - Zinc/Aluminum Cap

Install Note:

S-5!® Warning!

Please use these products responsibly! Visit our website or contact your S-5! distributor for available load test results. The user and/or installer of these parts is responsible for all necessary engineering and design to ensure the Solar Feet™ have been properly spaced and configured.

Notice to S-5! users: Due to the many variables involved with specific panel products, climates, wind loads, snow loads, and job particulars, the manufacturer cannot and does not express any opinions as to the suitability of any S-5! assembly for any specific application and assumes no liability with respect thereto. S-5! products are tested for ultimate holding strength on various profile types and materials. This information is available from the S-5! website: www.S-5.com.

These install instructions serve to illustrate the correct procedure for securing the SolarFoot to a roof. Proper layout and frequency will vary on a job specific basis and should be determined by a qualified professional. This document is an installation guide only and the photographs and drawings herein are for the purpose of illustrating installation, tools and techniques, not system designs.

INSTALLATION INSTRUCTIONS

Install Note:

The SolarFoot is made for exposed-fastened metal roofing. It provides an ideal, weatherproof mounting platform to attach the L-foot of a rail mounted solar system or other ancillaries to the roof.

1) Determine the location of the supporting structure of the roof. Wipe away excess oil and debris from the desired mounting location.

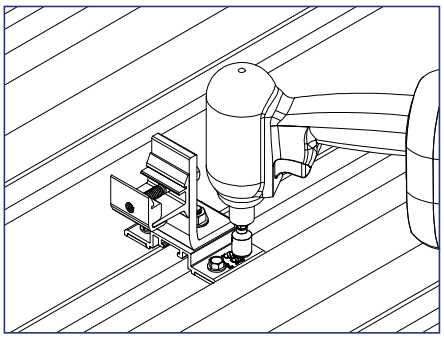

2) Peel the release paper from the base, align, and apply to roof surface so that fasteners will engage the structure below.

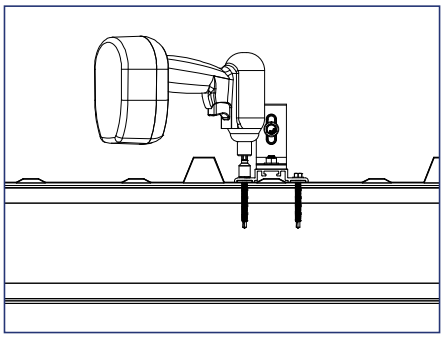

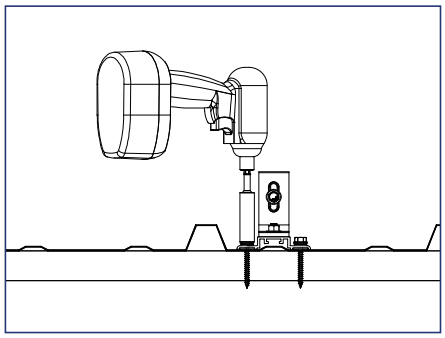

3) Install screws through the pre-punched holes in the SolarFoot into the structure below.

Install Note:

Attachment frequency and spacing for PV arrays is the responsibility of the system designer. The makers of S-5! SolarFoot make no representations with respect to the variables involved in PV array design. Visit the S-5! website for load testing data.

SolarFoot Placement Tips

The SolarFoot should be placed in the flat of the panel, between the ribs. It is designed to straddle striations or minor stiffening ribs when necessary. The SolarFoot must be mounted directly over and into the supporting structure of the roof, i.e. wood decking, wood or steel purlins, or trusses, NEVER into the metal roofing material alone.

To ensure brackets are installed in a straight line when desired, install a single SolarFoot on each end of the roof at a measured, consistent distance from the bottom edge of the roof. Use a string line between the two brackets. Mount the remaining brackets along the string line, directly into the supporting structure of the roof

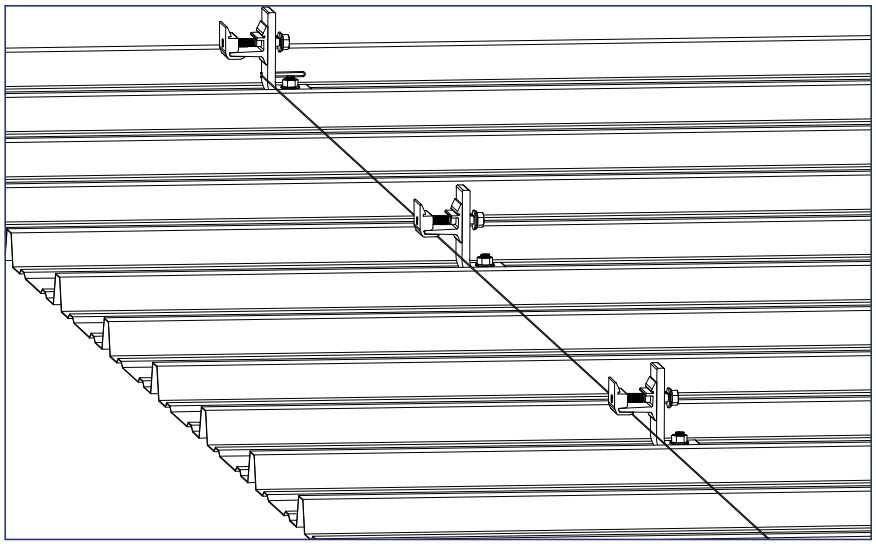

Ultra Rail & S-5! VersaBracket

Required Tools

- Screw gun
- Tape Measure
- Torque Wrench with 1/2" Socket
- Rag
- Socket Wrench with 1/2" Socket
- Stringline

Materials Included - S-5! VersaBracket, L Foot with Ultra Rail Mounting Hardware

1. (1)SnapNrack Ultra Rail Mounting Hardware
2. (1)SnapNrack L Foot
3. (1) M8-1.25 x 16mm Hex Flange Bolt
4. (1) M8-1.25 Hex Flange Nut
5. (1) S-5! VersaBracket

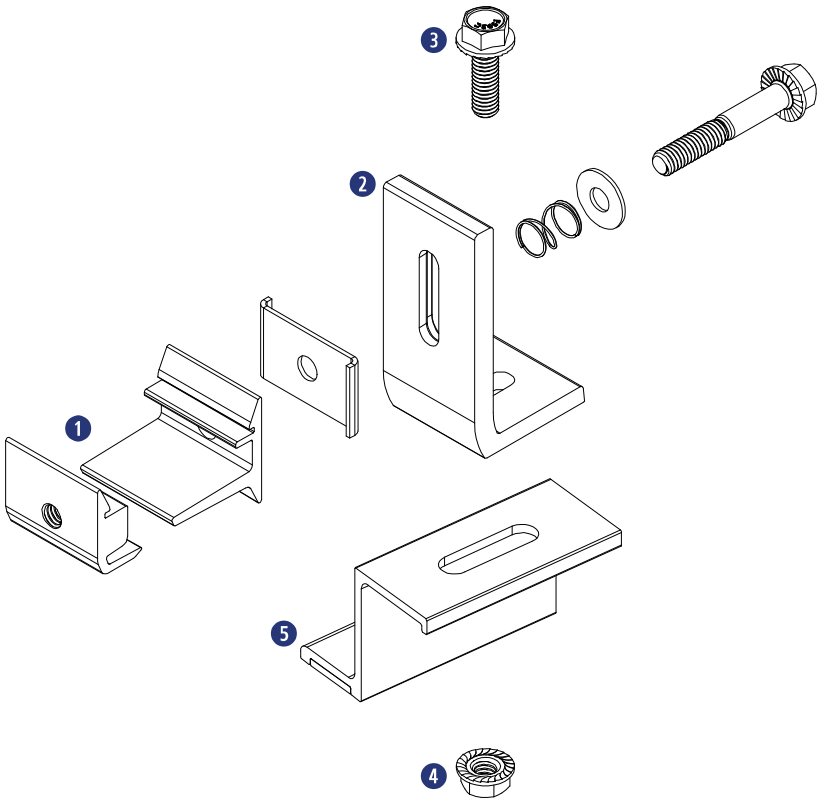

Other Materials Required

Use Proper Hardware
Only use appropriate screws and hardware when attaching this product into the supporting structure.

Not Provided

Metal to Metal Screw Specifications: 1/4-14 Self Drilling Screw - 1-1/2" to 2-1/2" Length - 3/8" Hex Washer Head - Zinc/Aluminum Cap

Not Provided

Metal to Wood Screw Specifications: 1/4-14 Type 17-AB Milled Point - 1-1/2" to 2-1/2" Length - 3/8" Hex Washer Head - Zinc/Aluminum Cap

Install Note:

S-5!® Warning!
Please use these products responsibly! Visit our website or contact your S-5! distributor for available load test results. The user and/or installer of these parts is responsible for all necessary engineering and design to ensure the VersaBracketTM has been properly spaced and configured. Notice to S-5! users: Due to the many variables involved with specific panel products, climates, snow melt phenomena, and job particulars, the manufacturer cannot and does not express any opinions as to the suitability of any S-5! assembly for any specific application and assumes no liability with respect thereto. S-5! products are tested for ultimate holding strength on various profile types and materials. This information is available from the S-5! website: www.S-5.com. This document is an installation guide only and the photographs and drawings herein are for the purpose of illustrating installation, tools and techniques, not system designs. Information contained within is intended to apply to the document as a whole.

INSTALLATION INSTRUCTIONS

Install Note:

The VersaBracket is made for trapezoidal exposed-fastened profiles.

1) VersaBracket should be placed in the flat of the panel, between the ribs, and must be mounted directly over and into the supporting structure of the roof, i.e. wood decking, wood or steel purlins or trusses, NEVER into the metal roofing material alone.

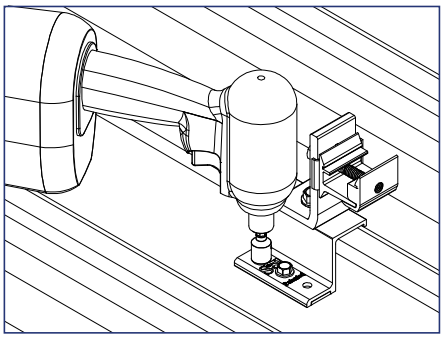

2) Determine the location of the supporting structure of the roof. When possible, secure the VersaBracket using all hole locations; when not possible, always use the two upslope hole locations. The only surface preparation necessary is to simply wipe away excess oil and debris.

3) Peel the release paper from the base, align, and apply to roof surface.

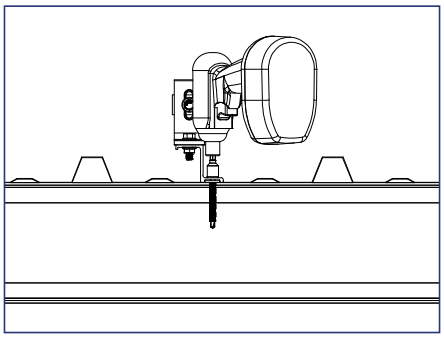

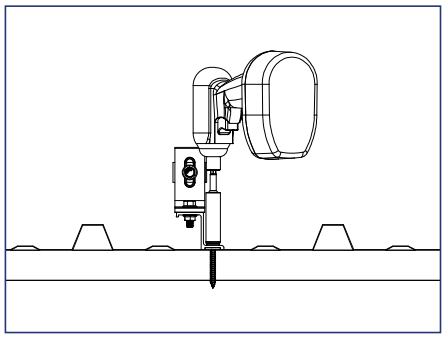

4) Secure the VersaBracket by drilling screws through pre-punched holes, directly into the supporting structure of the roof (3 holes are provided for convenience and versatility). Consult the S-5! Load Table for more information.

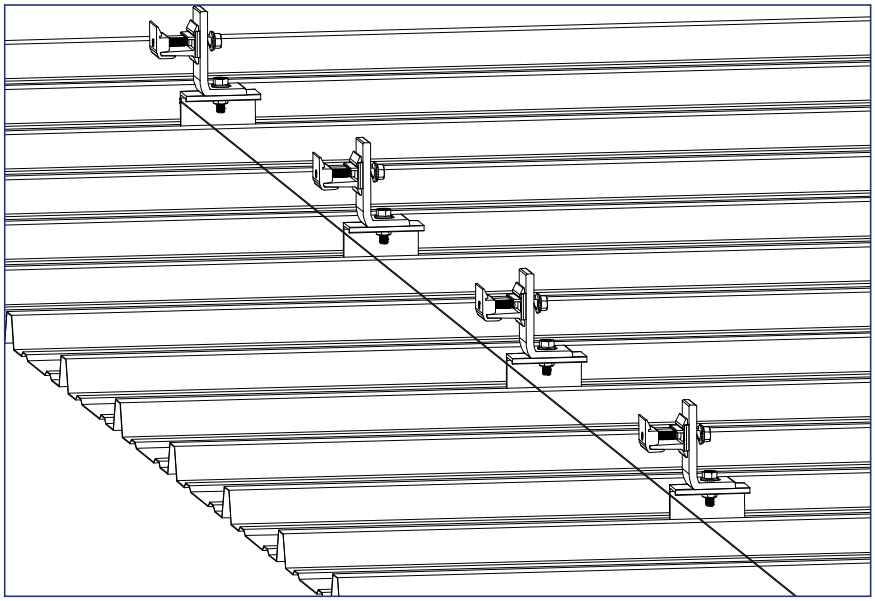

VersaBracket Placement Tips

To ensure brackets are installed in a straight line when desired, install a single VersaBracket on each end of the roof at a measured, consistent distance from the bottom edge of the roof. Use a string line between the two brackets. Mount the remaining VersaBracket along the string line, directly into the supporting structure of the roof.

Ultra Rail Mounting Hardware

Required Tools

- Torque Wrench
- Socket Wrench
- 1/2” Socket

Materials Included - Ultra Rail Mounting Hardware

1. (1) SnapNrack Ultra Mount (Tapped)
2. (1) SnapNrack Ultra Mount (Thru-Hole)
3. (1) SnapNrack Ultra Mount Spring
4. (1) SnapNrack Ultra Mount Spring Cage
5. (1) 5/16”-18 X 2-1/4” SS HCS Bolt

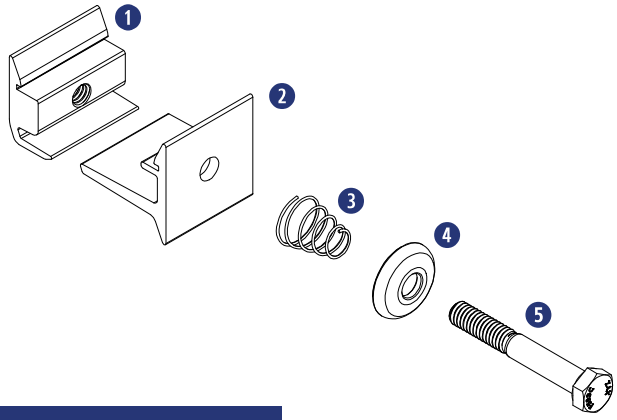

Other Materials Required - *Not Shown*

① Roof Attachment

Application Note:
Install Ultra Rail onto any roof attachment that uses an L foot or other slotted mount that accepts 5/16” hardware.

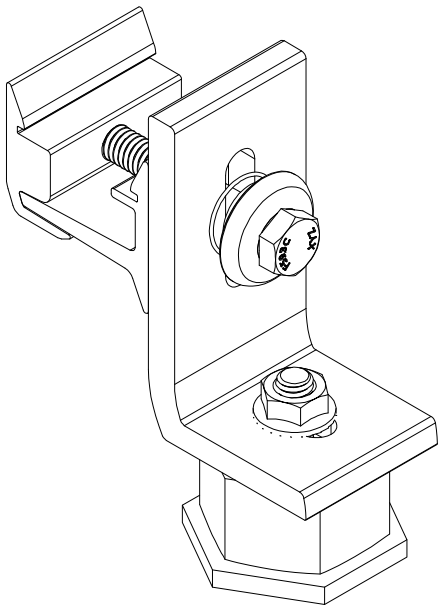

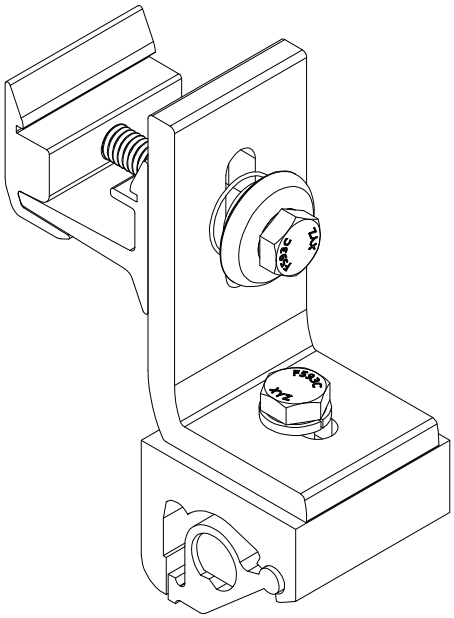

Ultra Rail Mounting Hardware Installed on Different Roof Attachments

Install Note:
Roof attachments used must always meet minimum structural requirements. Consult licensed structural engineer if necessary.

INSTALLATION INSTRUCTIONS

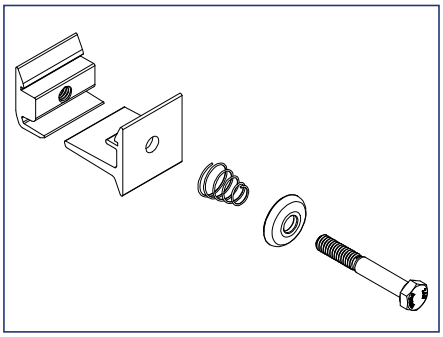

1) Disassemble Ultra Rail Mounting Hardware components, taking note of their installation order and orientation.

Install Note:
See exploded view on previous page for clarification.

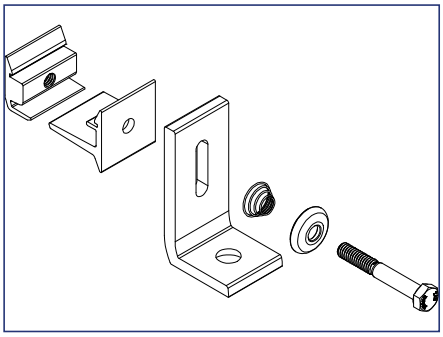

2) Re-assemble Ultra Rail Mounting Hardware components onto roof attachment in the following order:

Ultra Mount (tapped) – Ultra Mount (thru-hole) – roof attachment – spring – spring cage – bolt

Best Practice:
Ensure bolt is threaded into mount, but leave assembly loose for rail installation.

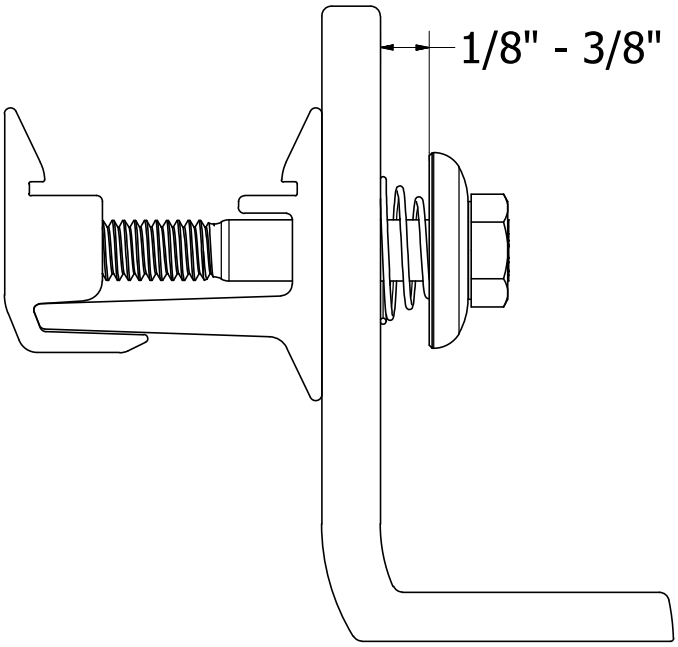

Recommended Ultra Rail Mounting Hardware Installation

Fixed Tilt Mounts (5° - 30° Tilt Up)

Note:
Installation of OmniBase on Flat roofs described in this Section pertains to Flush Mounted Standoff Mounts as well as Fixed Tilt Mounts

Required Tools

- Hammer or Stud Finder
- Roof Marking Crayon
- Drill with 3/16" Pilot Drill Bit (wood roof structures)
- Roof Sealant
- Socket Wrench
- Torque Wrench
- 1/2" Socket
- Tape Measure
- Pitch Finder Tool (Inclinometer)

Materials Included - Ultra Rail Standoff Tilt Kits

1. (2) SnapNrack OmniBase™
2. (1) Standoff with Ultra Rail Tilt Clamp, 5 ½" or 10" (front leg)
3. (1) Standoff with Ultra Rail Tilt Clamp, 10", 14" or 23" (rear leg)

Note:
OmniBase™ and Standoffs with Ultra Rail Tilt Clamp are kitted and are ordered as a unit.

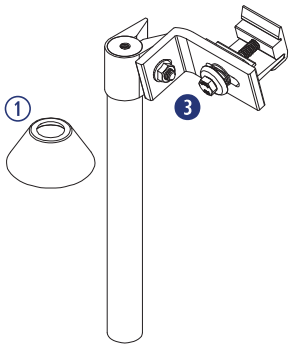

Other Materials Required - *Not Shown*

Fasteners (see list of fasteners under Installation Sequence #2 on following page)

(2) Conical flashings to match roof type or a pourable type roof penetration seal system or the SnapNrack OmniShield™ Flashing.

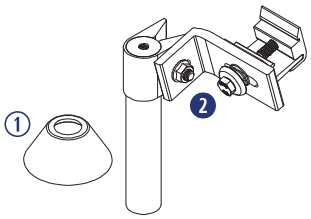

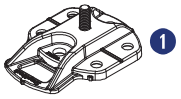

Optional Materials

① (2) Rubber Rain Collar (not required when sealing roof attachment with pourable roof sealant)

Application Note:
Install on flat roof, composition shingle roof, or tile roofs when additional tilt of solar array is required.

SnapNrack Fixed Tilt Kits may be installed as deck mounted systems when incorporated with the SnapNrack OmniShield™ roof sealing component (see Installation Sequence #'s 8-13). All other roof sealing methods using the OmniBase™ will require mounting to the roof structure.

Note:
5° - 30° is the approximate tilt angle relative to the roof surface, and is dependent on front to back standoff spacing and module orientation.
Approximate tilt angles (all arrangements are based on the requirement for the front leg to be limited to the 5½" or 10" Standoff Shaft): See Tilt Angle Table to right.

Installation Parameters:

- Maximum tilt angle relative to horizontal =30° (+/- 2°)
- Module tilt to be in the same azimuth direction as roof they are to be mounted on
  Exception: Flat roofs (defined as having a slope of less than 7°)
- Maximum roof slope = 23°

Ultra Rail - Tilt Angle Table
5 deg. - 30 Degree Fixed Tilt Kits - Standoffs with Ultra Rail Tilt Clamps

Tilt Angle (nominal)

Front to back attachment spacing	Landscape				
	5-1/2" & 10" Standoffs	5-1/2" & 14" Standoffs	5-1/2" & 23" Standoffs	10" & 14" Standoffs	10" & 23" Standoffs
16"	16°	28°	N/A	14°	N/A
24"	10°	20°	N/A	9°	28°
32"	8°	15°	28°	7°	22°
48"	N/A	N/A	N/A	N/A	N/A

Front to back attachment spacing	Portrait				
	5-1/2" & 10" Standoffs	5-1/2" & 14" Standoffs	5-1/2" & 23" Standoffs	10" & 14" Standoffs	10" & 23" Standoffs
16"	N/A	N/A	N/A	N/A	N/A
24"	N/A	N/A	N/A	N/A	N/A
32"	8°	15°	28°	7°	22°
48"	5°	10°	20°	5°	15°

Notes:
1. Table is based on 60 cell modules
2. Table assumes mounting zone on portrait modules not exceeding 25% of module length
3. Maximum tilt angle allowed = 30° relative to horizontal

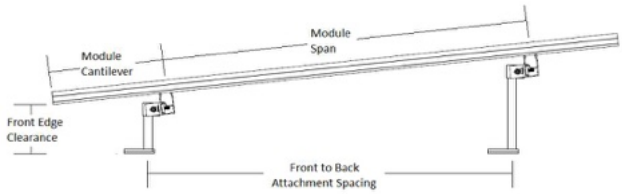

INSTALLATION INSTRUCTIONS

Installation Sequence #'s 3 through 5 pertain to installations with cone type flashings at roof. See Installation Sequence #'s 6 through 7 for installations with pourable type roof penetration seal systems and Installation Sequence #'s 8 through 13 for installations with SnapNrack OmniShield™ Flashing.

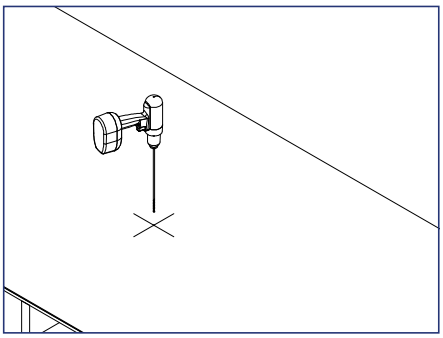

1) If required for rafter/truss applications; using roof attachment locations drawn on roof during system layout, drill pilot hole(s) into roof framing member.

Install Note:

Ensure the lag or self-drilling screws are installed in a solid portion of the roof framing member. If roof framing member is not found, seal the pilot hole immediately with proper roof sealant.

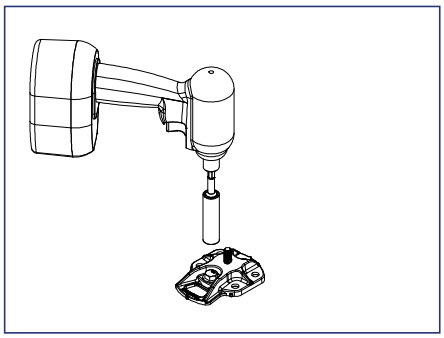

2) Apply roofing sealant to underside of OmniBase™ & in pilot hole(s). Attach Base to roof with the appropriate fastener/s based on application from the list below:

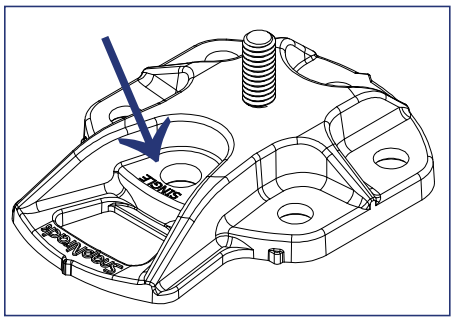

Install Note:

When attaching OmniBase™ with a single fastener, use hole labeled "Single".

- **Standard wood rafter:** (1) 5/16" S.S. lag screw with minimum 2.5" embedment (Attachment Detail SNR-DC-01249)
- **Flat wood rafter or purlin:** (2) S.S. 5/16" lag screws with minimum 1.5" embedment (Attachment Detail SNR-DC-01250)
- **Wood I-Joist:** (2) S.S. 1/4" lag screws, choose length for proper embedment (Attachment Detail SNR-DC-01251)
- **Steel Purlin:** (2) #14 S.S. self-tapping steel fasteners, choose length for proper embedment (Attachment Detail SNR-DC-01252)
- **Concrete:** (1) 3/8" Wedge Anchor or equivalent, (2) 1/4" Wedge Anchor or equivalent, choose length for proper embedment
- (Attachment Detail SNR-DC-01253)
- **Standard 1/2" Roof Sheathing:** (6) #14 S.S. wood screws, choose length for proper embedment (Attachment Detail SNR-DC-01254)

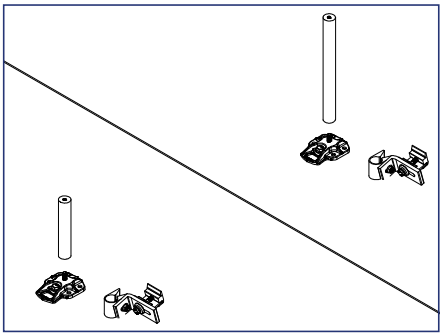

3) **Cone Type Flashings:** Install Standoff shaft onto base.

Install Note:

Standoff shafts need to be tightened to base using channel lock pliers.

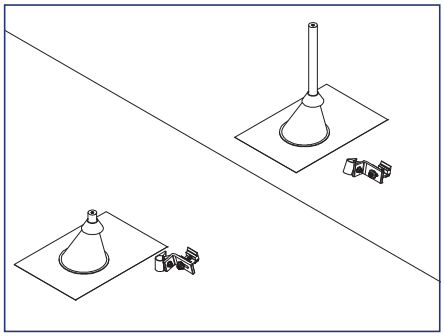

4) **Cone Type Flashings:** Install appropriate roof flashing over Standoff Shaft and seal to roof surface per roofing standards and best practices. Install Rubber Rain Collar over the Standoff Shaft.

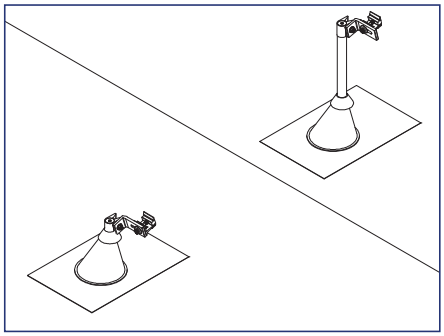

5) **Cone Type Flashings:** Install SnapNrack Ultra Rail Tilt Clamp assemblies on to Standoff Shafts.

Best Practice:

Set the Standoff Clamp assemblies approximately 1/2" below top of Standoff Shaft to accommodate final leveling adjustments.

Skip to installation sequence #14.

Fixed Tilt Mounts (5° - 30° Tilt Up)

INSTALLATION INSTRUCTIONS

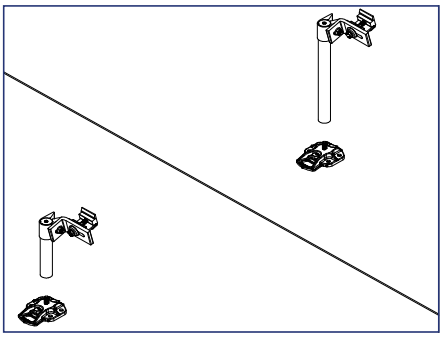

6) Pourable Type Roof Penetration Seal System: With Ultra Rail Tilt Clamp assembly on the Standoff Shaft, install Standoff shaft onto base.

Install Note:

Standoff shafts need to be tightened to base using channel lock pliers.

Best Practice:

Set the Standoff Clamp assemblies approximately 1/2" below top of Standoff Shaft to accommodate final leveling adjustments.

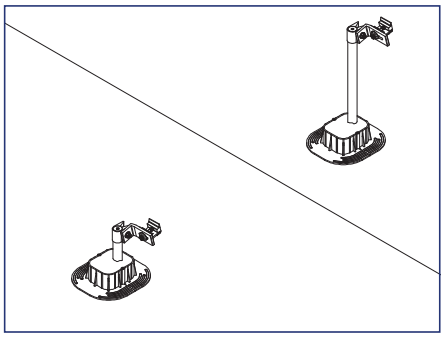

7) Pourable Type Roof Penetration Seal System: Seal roof penetrations at bases by placing curb around Base then applying pourable sealant material.

Skip to installation sequence #14.

Install Note:

Follow manufacturer's instructions closely when applying this type of roof sealing system.

INSTALLATION INSTRUCTIONS - OMNISHIELD™ FLASHING

Install Note:

Prior to applying roof sealant on OmniShield™, verify that the sealant is compatible with the roof membrane that the OmniShield™ is being installed on.

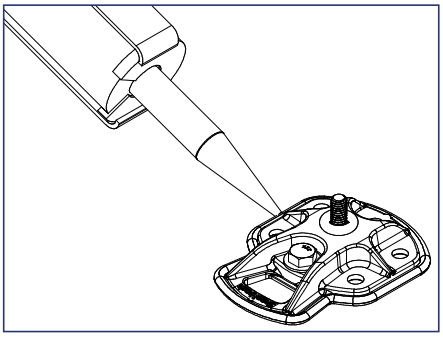

8) Apply a ¼" bead of ChemLink M-1 roofing sealant to base of 5/16" threaded stud & to the entire perimeter of OmniBase™. Clean all smooth substrates with isopropyl or denatured alcohol a minimum of 2" all around OmniBase™. Brush away all gravel or loose granules to the same distance.

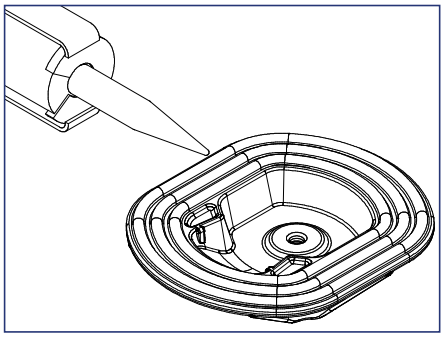

9) Apply a ¼" bead of ChemLink M-1 roof sealant into all 3 of the grooves on the underside of OmniShield™. Sealant should be applied as raised beads approximately ⅛" higher than the underside surface of OmniShield™.

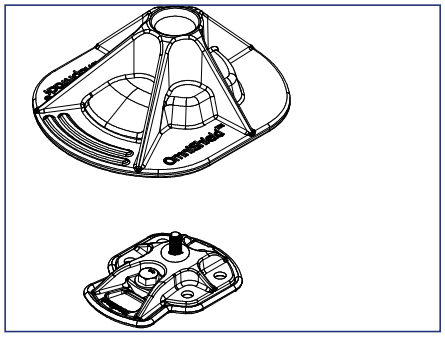

10) Install OmniShield™ on to roof over the OmniBase™, pressing firmly onto roof until sealant can be seen around the base of the OmniShield™.

Install Note:

If roof sealant is not visible around perimeter of OmniShield, lift the OmniShield off of roof, apply more sealant then reapply to roof.

INSTALLATION INSTRUCTIONS - OMNISHIELD™ FLASHING

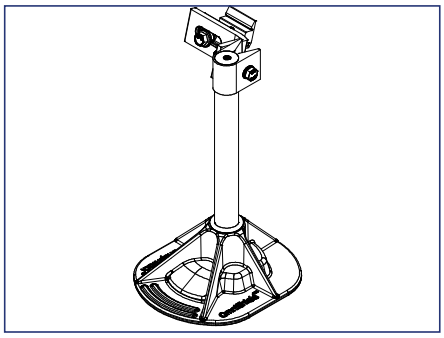

11) Install Tilt Standoff through the opening in the OmniShield™ and thread on to the 5/16" stud on the OmniBase™.

Install Note:

Standoff shafts need to be tightened to base using channel lock pliers

Best Practice

Set the Standoff Clamp assemblies approximately 1/2" below top of Standoff Shaft to accommodate final leveling adjustments.

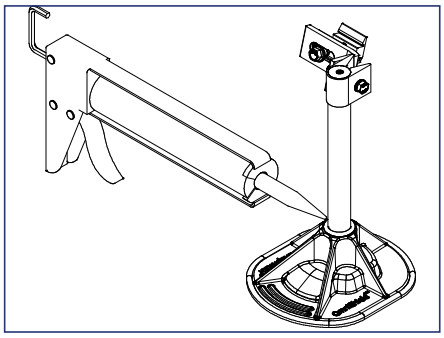

12) Apply a bead of roof sealant around the top opening of the OmniShied™ at Standoff penetration.

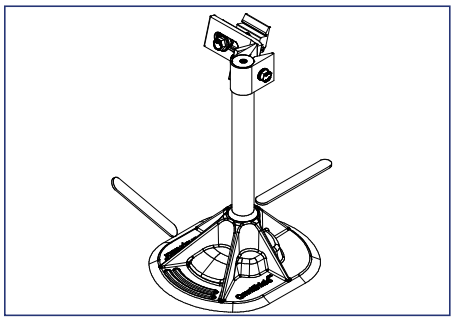

13) Smooth out the excess roof sealant at the base of the OmniShield™ and at the top opening.

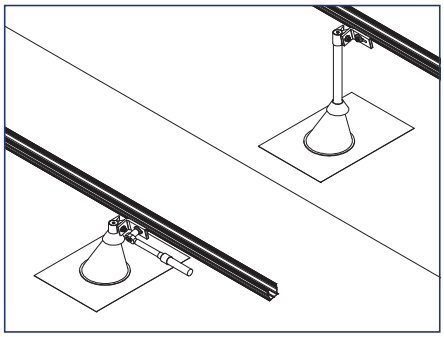

14) Set rails into the Ultra Rail Mounting Hardware on front and rear mounts then tighten the Ultra Rail Mounting Hardware to 12 ft-lbs. Connect multiple lengths of rail using the Ultra Rail Splice *(see "UR-40 or UR-60 Rail Splice" sections of manual)*

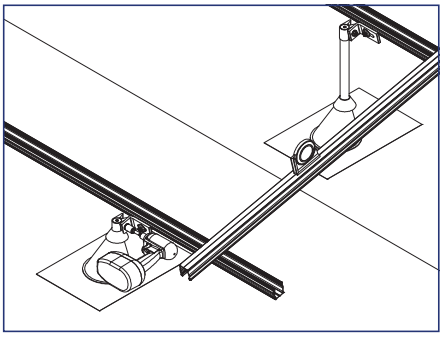

15) Set all Ultra Rail Mount angles to desired tilt angle usingan Inclinometer tool or other pitch measuring device. Tighten bolts to 10+ ft-lbs.

Best Practice:

Verify that tilt angles for both front and rear rails are in alignment and flush with each other by laying a section of rail (tilt setting rail) across both ails simulating an installed module.

Installing and Leveling Rails

Required Tools

- Level
- String Line or Spare Rail
- Pitch Meter
- Torque Wrench
- Socket Wrench
- 1/2" Socket

Materials Included - Installing and Leveling Rails

1. SnapNrack Ultra Rail (UR-40, UR-45 or UR-60)
2. SnapNrack Ultra Rail Splice (UR-40, UR-45 or UR-60)
3. Pre-Installed SnapNrack Roof Attachments

   (L Foot Mount, Tile Replacement, etc.)

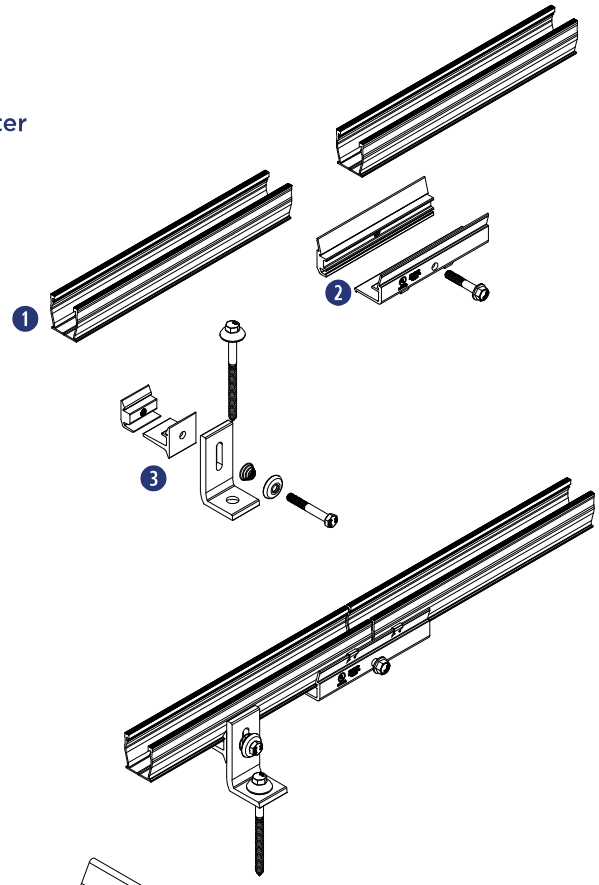

Other Materials Required - *Not Shown*

① SnapNrack Ultra Rail Leveling Spacer

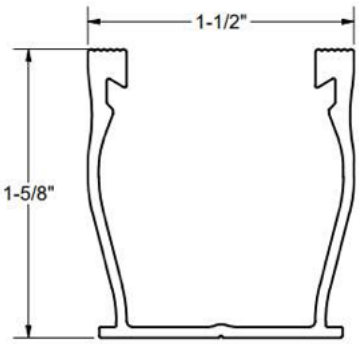

UR-40 Rail Profile

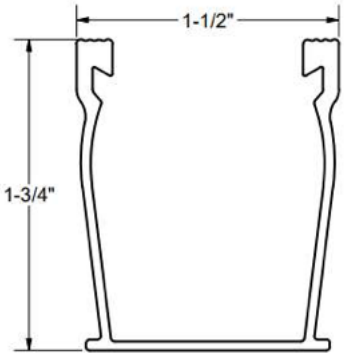

UR-45 Rail Profile

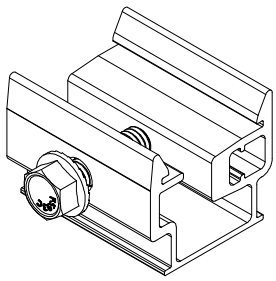

Ultra Rail Leveling Spacer

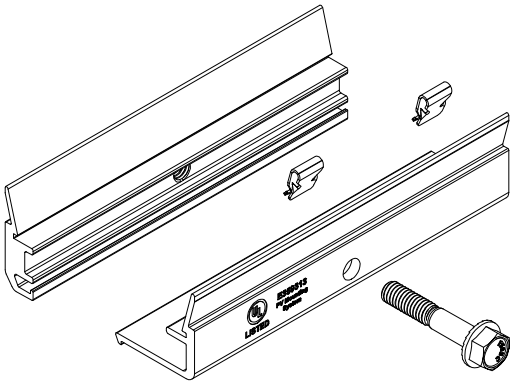

UR-40 & UR-45 Rail Splice

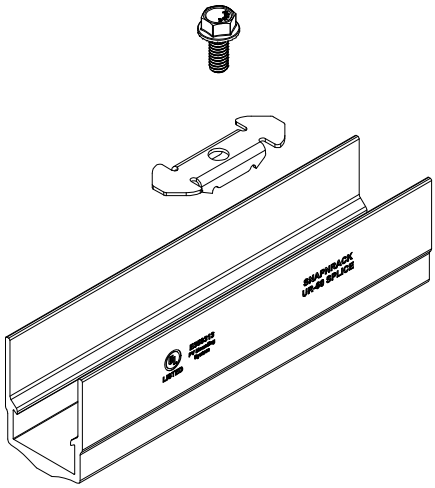

UR-60 Rail Splice

Installing and Leveling Rails

INSTALLATION INSTRUCTIONS

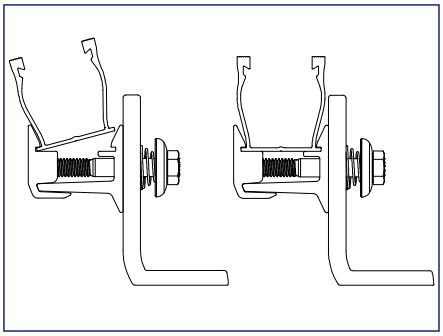

1) Set rails into the attachments by dropping and snapping into the mounts. Connect multiple lengths of rail end to end using the SnapNrack Ultra Rail Splice (see "Ultra Rail Splice" section).

Install Note:
Slightly rocking rail into mounts can ease installation, leading first with side of rail furthest from mount.

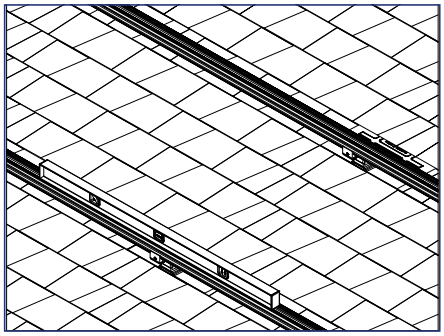

2) Level the bottom rail of the array to the roof and tighten attachment points.

Best Practice:
Set attachments in the middle of available leveling range to start.

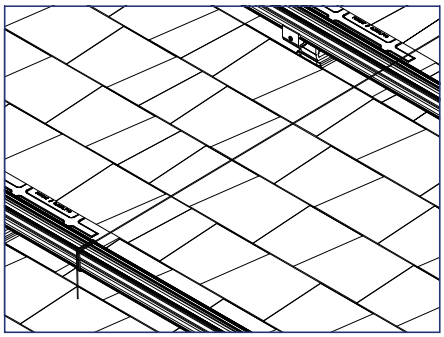

3) Run a string line or spare rail from the bottom rail to the top rail and set desired pitch of the array by adjusting the top rail, add L Foot Extension if needed.

Install Note:
See "Leveling Components" section for installation instruction and restrictions.

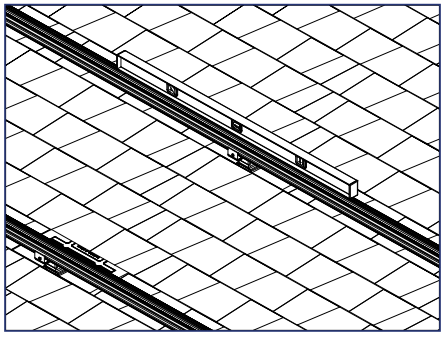

4) Level the top rail by moving the string line down the length of the rail, matching pitch over the entire length of the array.

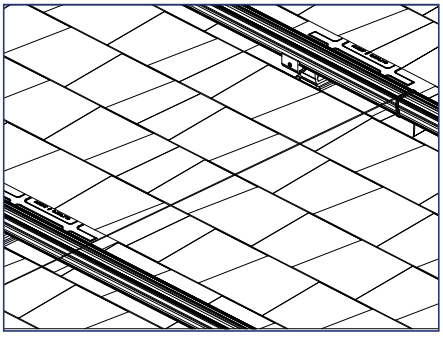

5) Level the remaining rails to the string line by working out from the middle rail, add L Foot Extensions or spacers if needed.

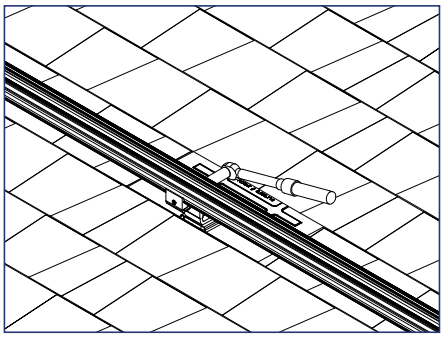

6) Tighten all racking hardware to 12 ft-lbs.

Note:
The minimum standoff height between the modules and roof is as follows:

- REC Solar, Yingli, and Suniva modules: 4.00"
- ReneSola modules: 3.93" (100 mm)
- Trina Solar modules: 4.53" (115 mm)

INSTALLATION INSTRUCTIONS

SnapNrack Ultra Rail Leveling Spacer

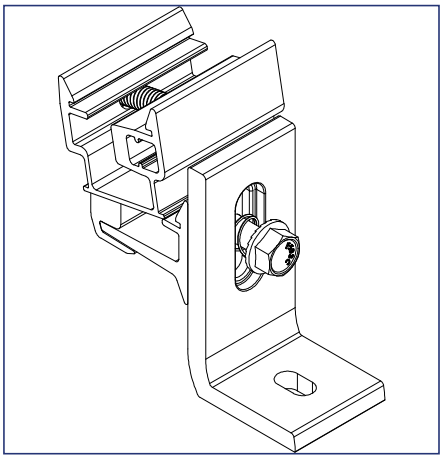

1) Snap leveling spacer into Ultra Rail mount.

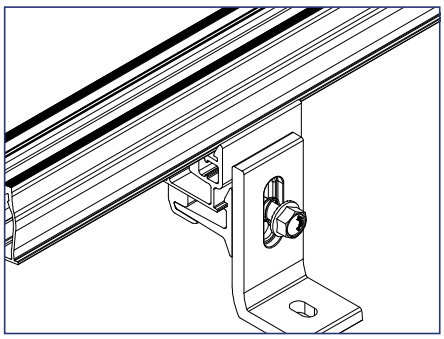

2) Snap Ultra Rail into leveling spacer.

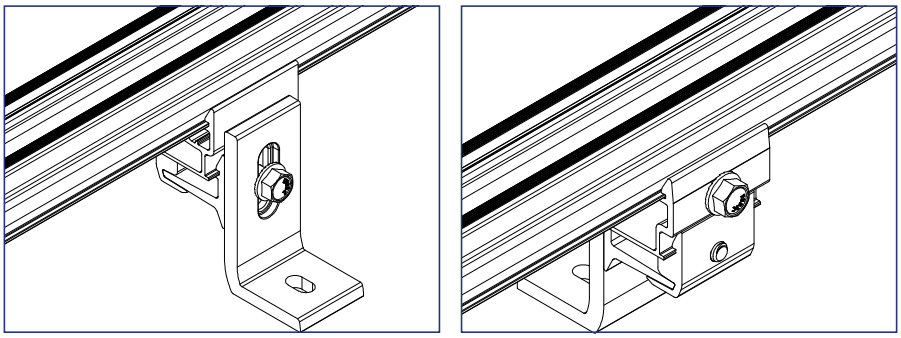

3) Finalize rail position and tighten all hardware to 12 ft-lbs.

Use a single leveling spacer on no more than 30% of attachment points, and no more than two leveling spacers on more than 10%.

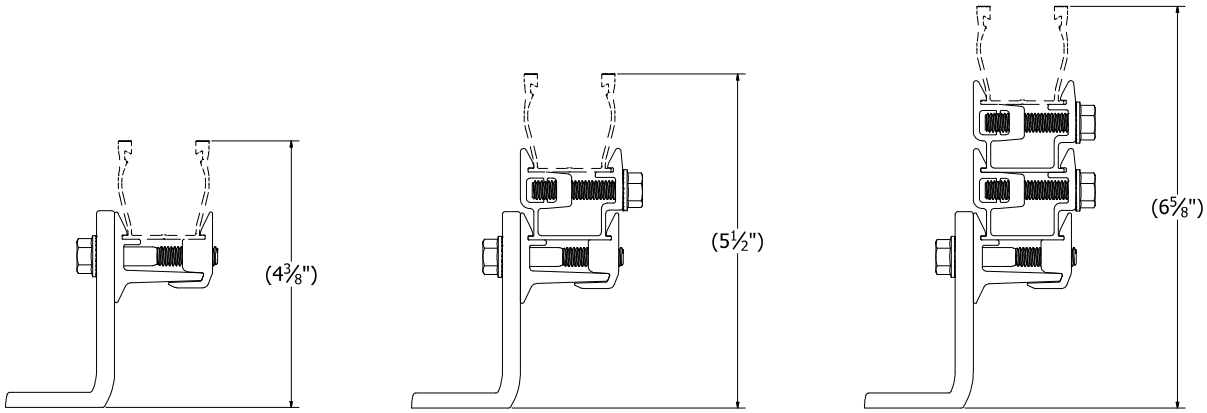

Leveling Spacer Provides Up To 2.25" of Additional Height Adjustment
(UR-60 Rail Adds 5/8" To Overall Height)

UR-40 & UR-45 Rail Splice

INSTALLATION INSTRUCTIONS

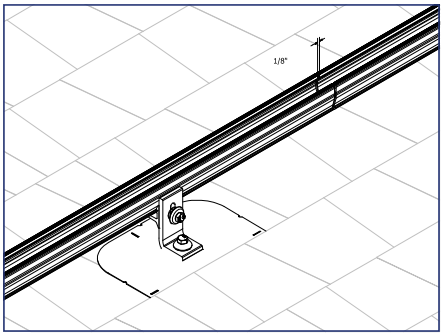

1) Align sections of rail and leave a 1/8" - 1/4" gap.

Install Note:

Leaving a gap between rails will allow for thermal expansion of rail and drainage.

Any section of rail that is spliced will need to be supported by a roof attachment on both sides. Splices are not allowed to be installed on rail cantilevers.

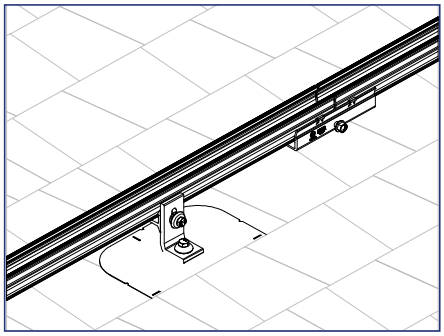

2) Install rail splice assembly onto bottom of rail, making sure both rails are seated in grooves of splice and that the splice is centered.

Install Note:

Gap between rails must land between bonding clips on splice.

Best Practice:

Hold sides of splice together on rails with one hand and tighten with the other.

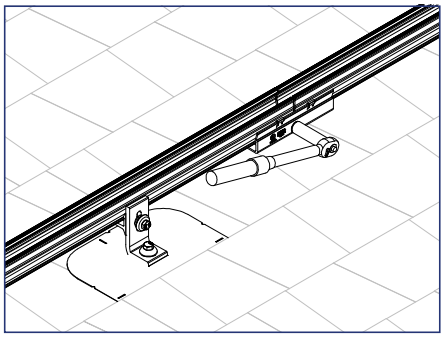

3) Tighten splice hardware to 12 ft-lbs.

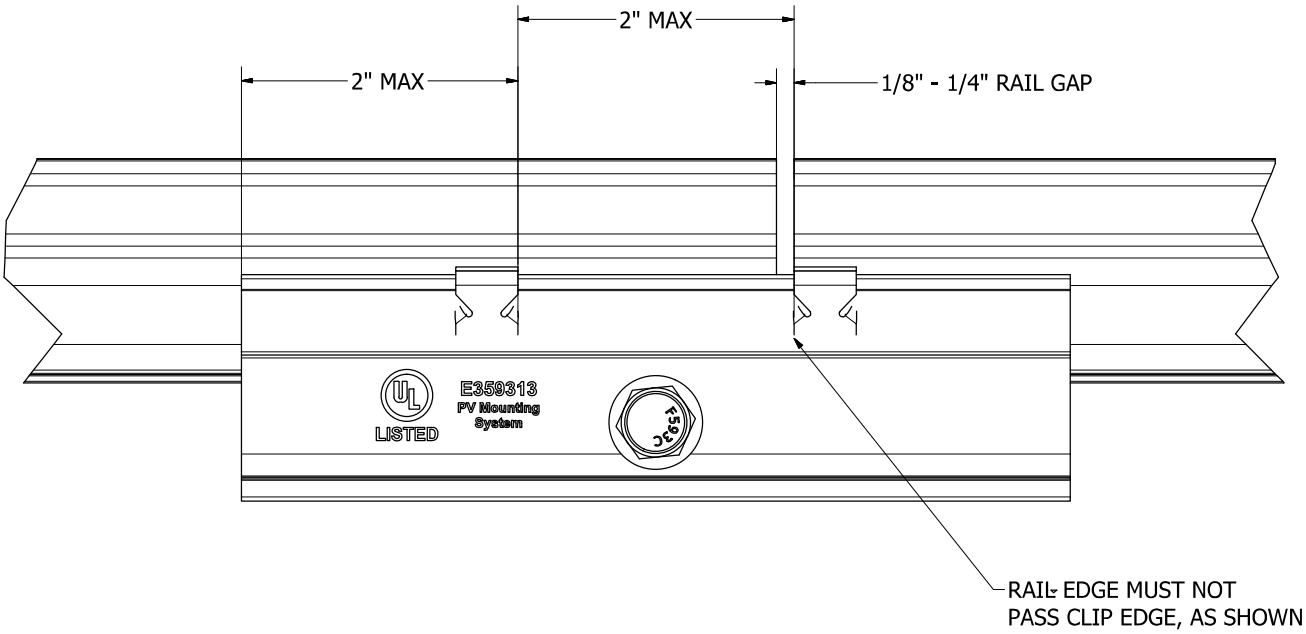

UR-40 & UR-45 Splice Installation Limitations

INSTALLATION INSTRUCTIONS

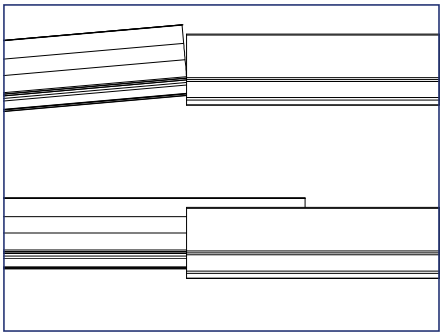

1) Slide first rail into splice, ensuring that BOTH rail flanges are engaged into lower section of splice.

Best Practice:
Rocking rail in slightly from the bottom can ease install.

Install Note:
Any section of rail that is spliced will need to be supported by a roof attachment on both sides. Splices are not allowed to be installed on rail cantilevers.

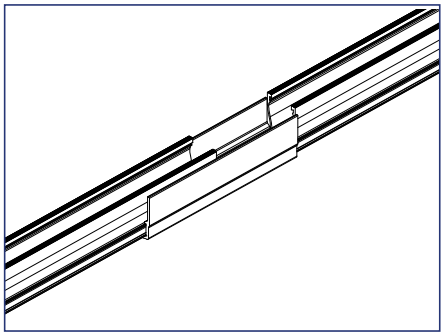

2) Slide second rail into splice, ensuring that BOTH rail flanges are engaged into lower section of splice.

Best Practice:
Rocking rail in slightly from the bottom can ease install.

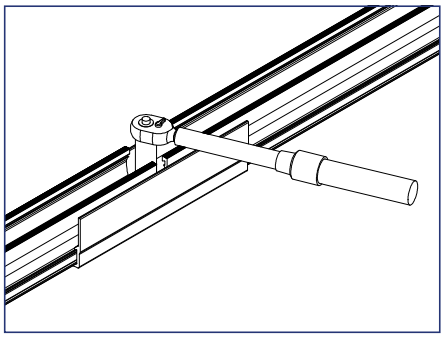

3) Tighten splice hardware to 12 ft-lbs

Install Note:
Line up rails with notches in bridge and leave approximately 1/2" gap between rails to allow for thermal expansion of rail.

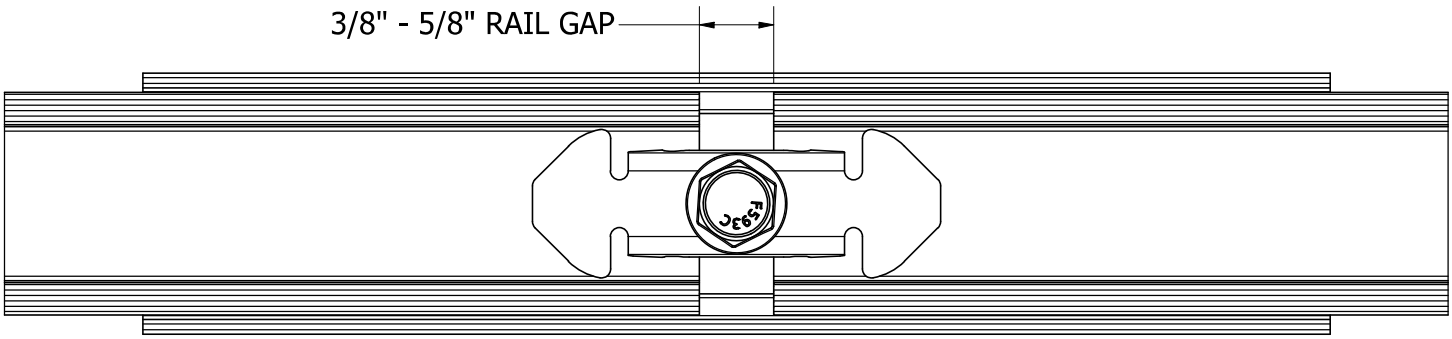

UR-60 Splice Installation Limitations

Module Installation

Required Tools

- Torque Wrench
- Socket Wrench
- 1/2” Socket

Materials Needed - Module Installation

1. Pre-Installed SnapNrack Roof Attachments
2. Pre-Installed SnapNrack Rails
3. SnapNrack Mid Clamp Assemblies
4. SnapNrack End Clamp Assemblies
5. PV Modules

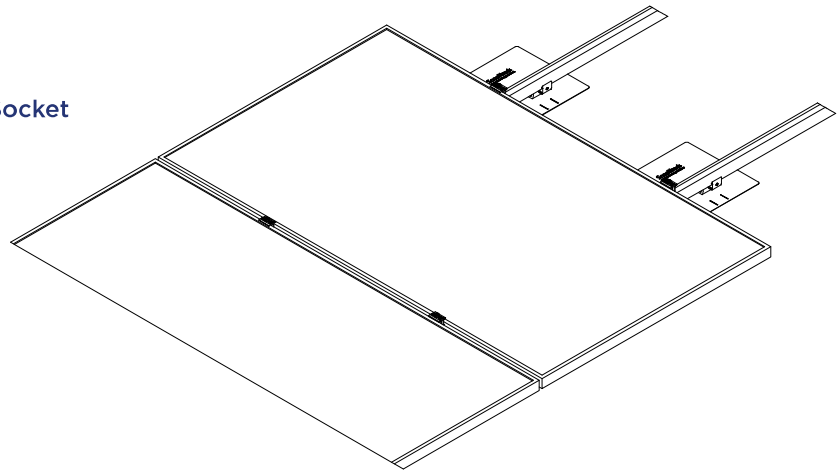

Ultra Rail Mid Clamp Assembly

1. (1) 5/16”-18 X 1-1/2” SS Flange Bolt
2. (1) SnapNrack Ultra Rail Mid Clamp Top
3. (1) SnapNrack Ultra Rail Mid Clamp Base
4. (1) SnapNrack Ultra Rail Mid Clamp Extension

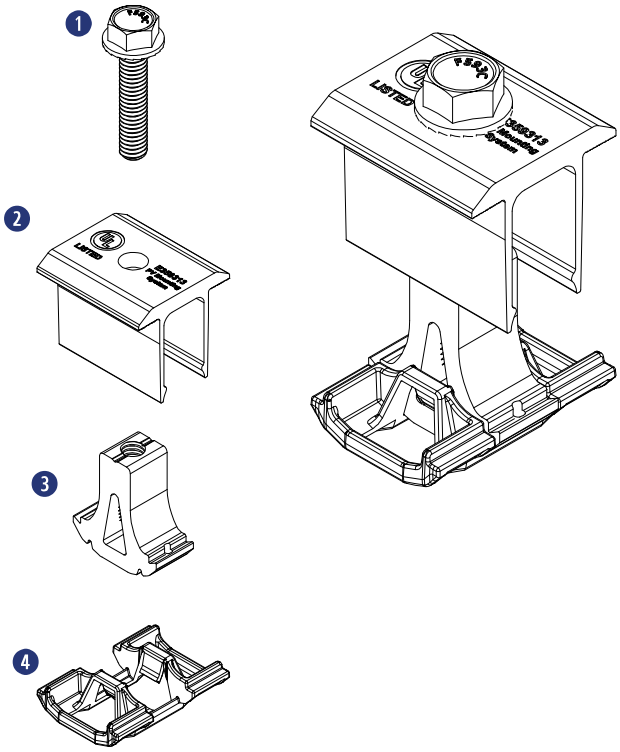

Ultra Rail End Clamp Assembly

1. (1) 5/16”-18 X 1-1/2” SS Flange Bolt
2. (1) SnapNrack Ultra Rail End Clamp Top
3. (1) SnapNrack Ultra Rail End Clamp Base

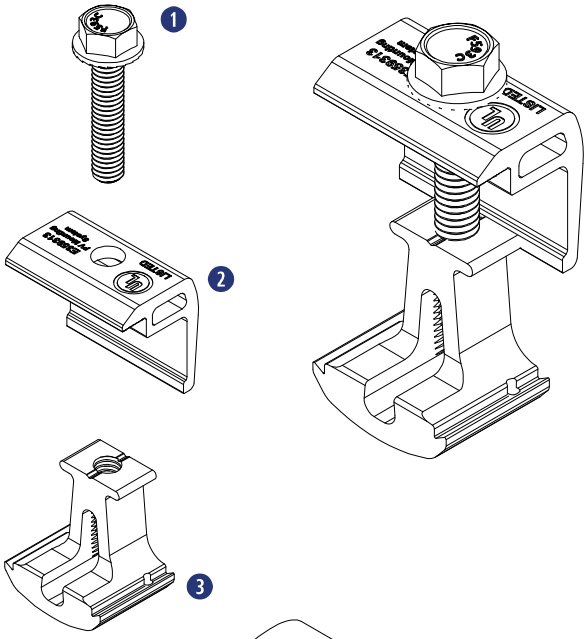

Universal End Clamp Assembly

1. (1) 5/16”-18 X 1-1/2” SS HCS Bolt
2. (1) 5/16” X 3/4” SS Flat Washer
3. (1) SnapNrack Universal Wedge
4. (1) SnapNrack Universal Wave

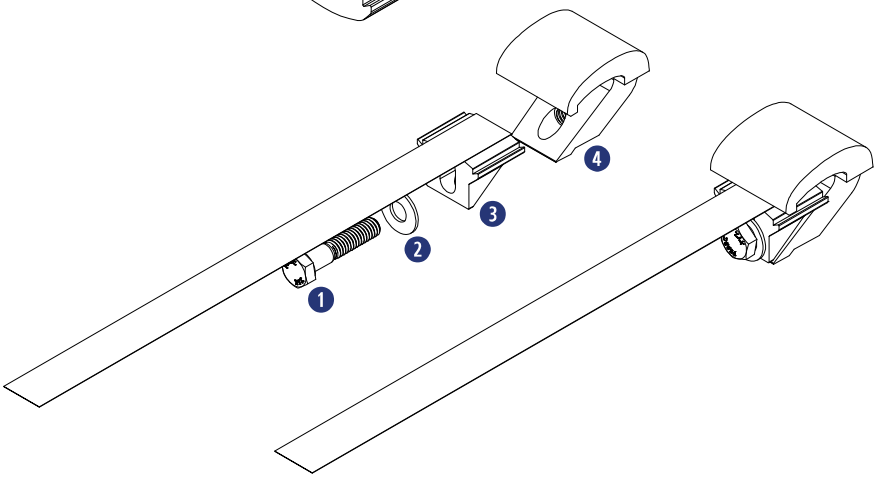

INSTALLATION INSTRUCTIONS

SnapNrack Ultra Rail Mid Clamp

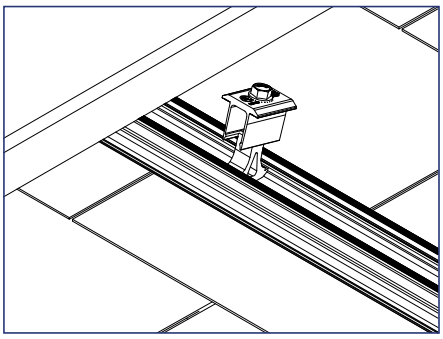

1) Snap the base into the top channel of the rail.

Best Practice:
Backing off bolt will ease installation into rail channel.

Install Note:
Module clamps cannot be installed anywhere there is a gap between rails (i.e. splice locations). Modules should be shifted slightly when this occurs.

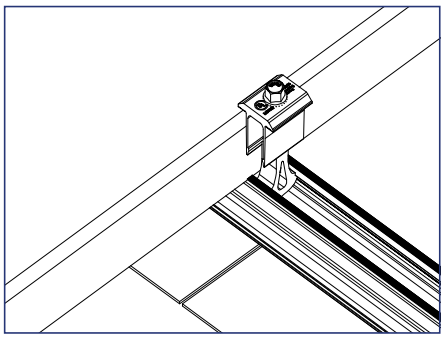

2) Slide the clamp flush to the module with the top lip of the mid clamp over the top edge of the module frame.

Install Note:
Take care to avoid having wires pinched between modules and rails, as this can lead to system failure and be dangerous.

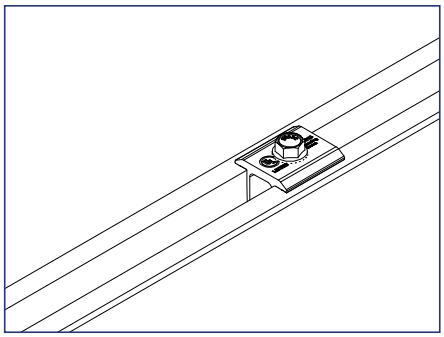

3) Place the next module flush to the other side of the mid clamp.

Install Note:
Ultra Rail Mid Clamps create 3/4" gap between modules.

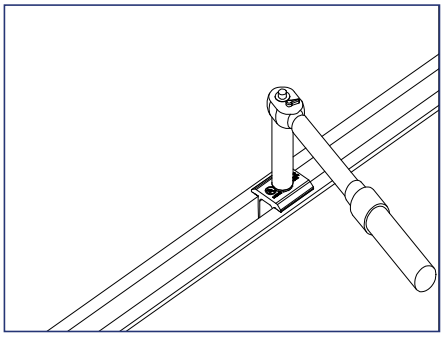

4) Tighten hardware to 16 ft-lbs.

INSTALLATION INSTRUCTIONS

SnapNrack Ultra Rail End Clamp

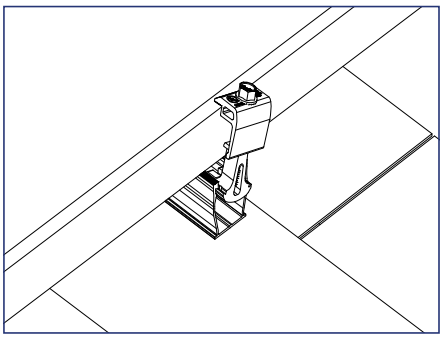

1) Snap the end clamp base into the top channel of the rail.

Install Note:

Ultra Rail End Clamps require extra rail to ensure that channel nut is fully engaged.

Module clamps cannot be installed anywhere there is a gap between rails (i.e. splice locations). Modules should be shifted slightly when this occurs.

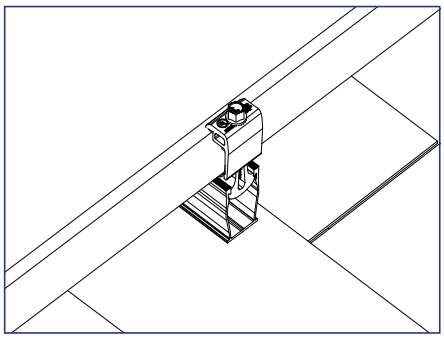

2) Slide the clamp flush to the module with the top lip of the end clamp over the top edge of the module frame.

Install Note:

Take care to avoid having wires pinched between modules and rails, as this can lead to system failure and be dangerous.

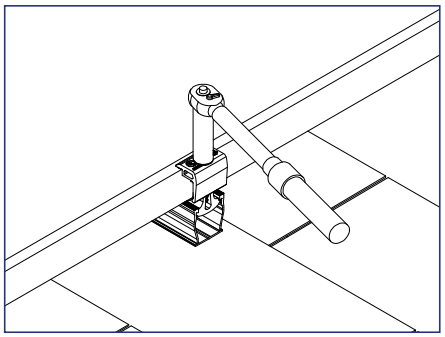

3) Tighten hardware to 16 ft-lbs.

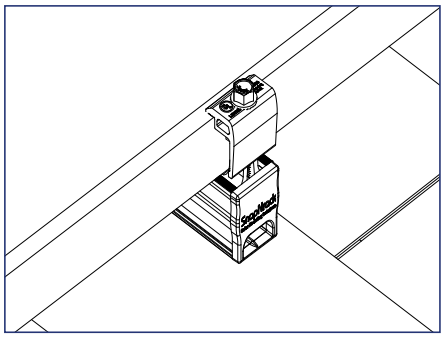

4) Install end cap to finish.

INSTALLATION INSTRUCTIONS

SnapNrack Universal End Clamp

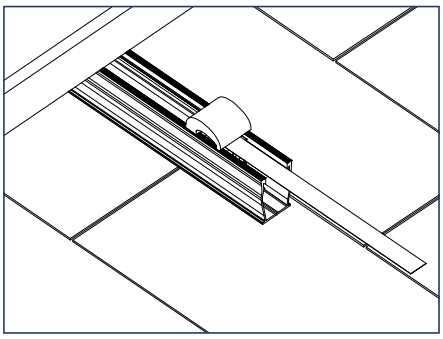

1) Slide the preassembled Universal End Clamp (UEC) into the end of the rail.

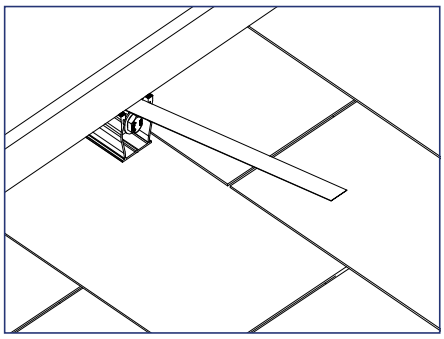

2) Lift the module and slide the clamp far enough under the module to pass the lip of the bottom edge of the module frame.

Install Note:
Take care to avoid having wires pinched between modules and rails, as this can lead to system failure and be dangerous.

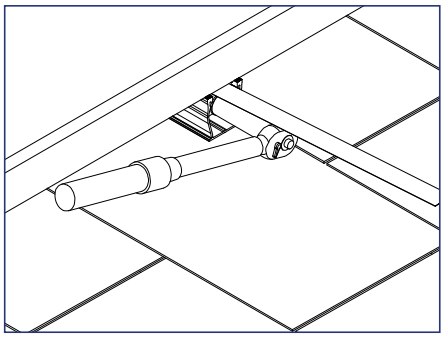

3) Use the pull tab to hold the UEC taut towards the end of the rail and tighten hardware to 10 ft-lbs.

Install Note:
Rail can be cut flush to the module when using UEC.

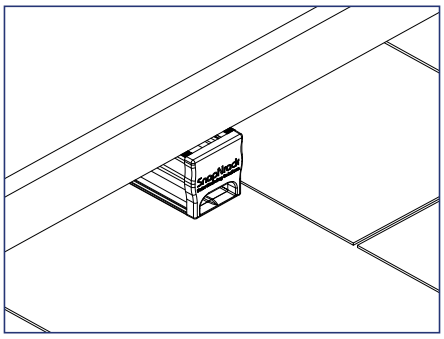

4) Install end cap to finish.

Install Note:
Modules need to be grounded separately when Universal End Clamps are the only type of clamp attaching a module.

Rail Finishing

Required Tools

- Reciprocating Saw or Portable Band Saw

Materials Included - Rail Cutting Tool and Rail End Cap

1. (1) SnapNrack Rail Cutting Tool
2. (1) SnapNrack Ultra Rail End Cap (UR-40, UR-45 or UR-60)

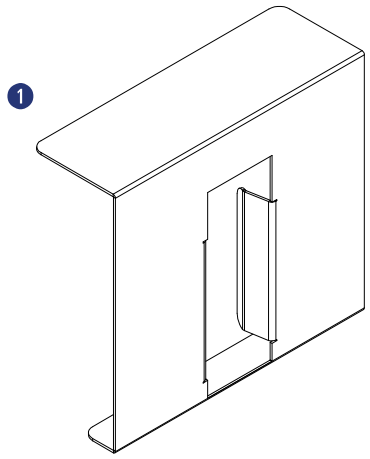

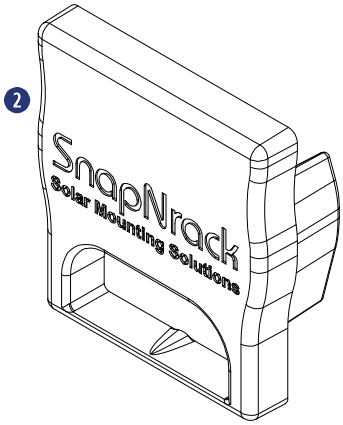

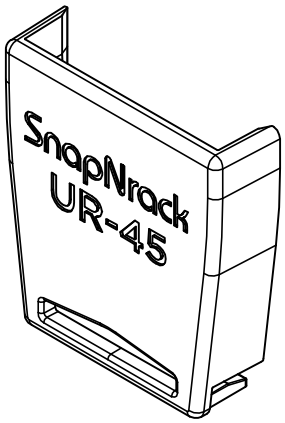

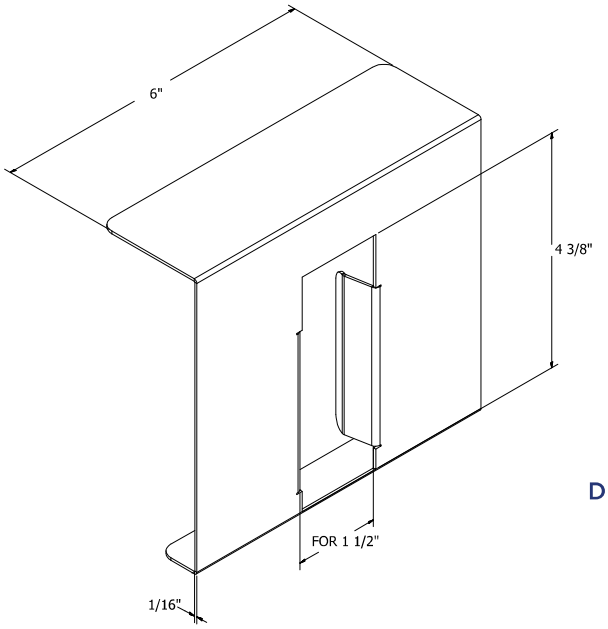

Dimensioned Rail Cutting Tool

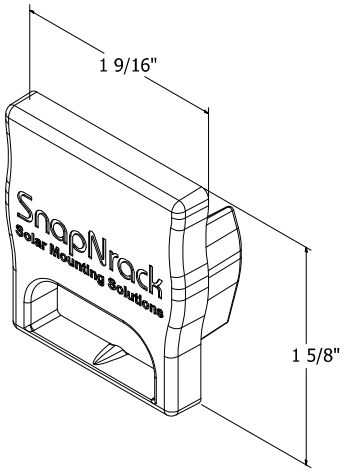

Dimensioned UR-40 Rail End Cap

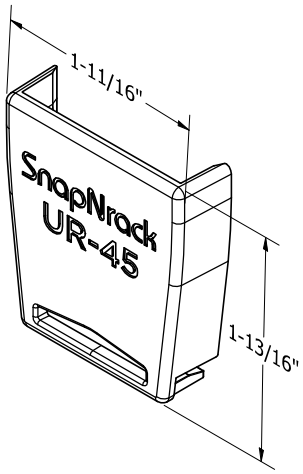

Dimensioned UR-45 Rail End Cap

Application Note:

Use to cut rail flush to module frame when using Universal End Clamps (UEC).

INSTALLATION INSTRUCTIONS

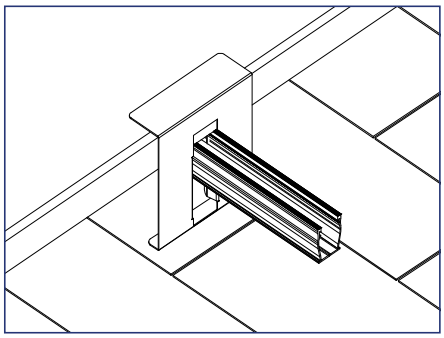

1) Slide the Rail Cutting Tool over the end of the rail and place it so that the upper lip is safely covering the edge of the module *(optional)*.

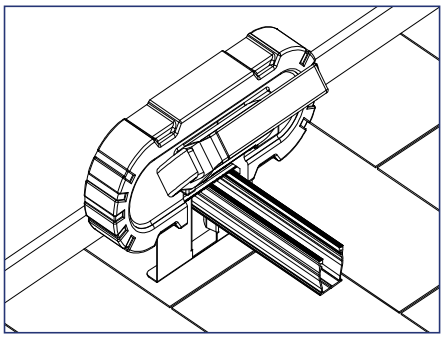

2) Use the reciprocating saw or band saw to cut off the end of the rail, then remove any sharp edges.

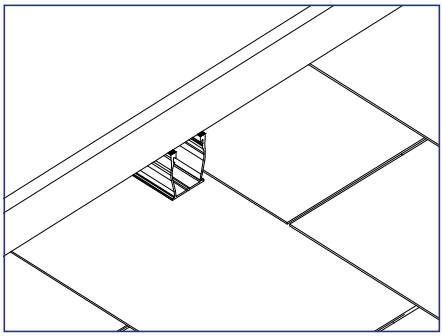

3) Remove the Cutting Tool from the rail, then remove any sharp edges.

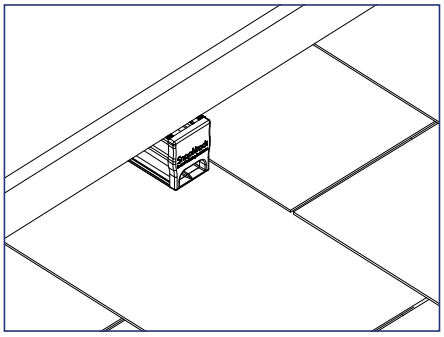

4) Insert SnapNrack Ultra Rail End Cap into the cut end of the rail to create a flush finish to the array.

Wire Management

Required Tools

- Socket Wrench (Wire Clamp)
- 1/2” Socket (Wire Clamp)

Materials Included - Wire Retention Clip

1. SnapNrack Wire Retention Clip

Wire Retention Clip

Application Note:

Install as necessary to manage and safely retain conductors within SnapNrack rails.

Materials Included - Wire Clamp

1. (1) SnapNrack 4-Wire Clamp, Trunk Cable Clamp, or Universal Wire Clamp

Application Note:

Install as necessary to secure cables and conductors running from rail to rail, or transitioning out/in from a rail channel

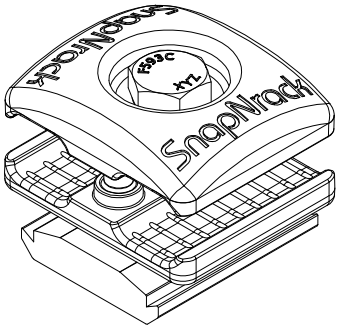

Universal Wire Clamp Assembly

INSTALLATION INSTRUCTIONS

SnapNrack Wire Retention Clip

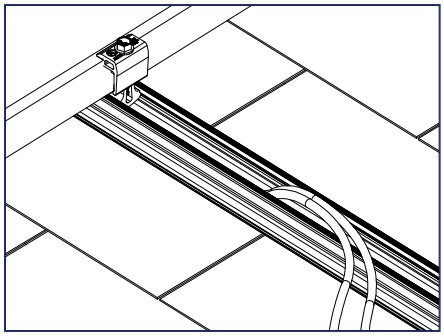

1) Place all electrical conductors in the bottom of the rail channel.

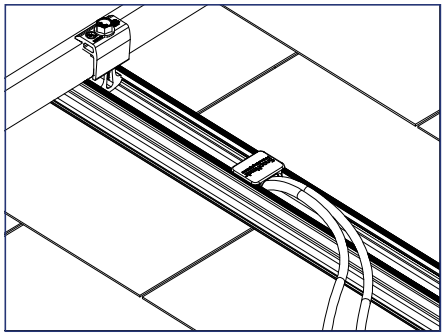

2) Install the Wire Retention Clip by snapping it into place on the rail.

SnapNrack 4-Wire, Trunk Cable, or Universal Wire Clamp

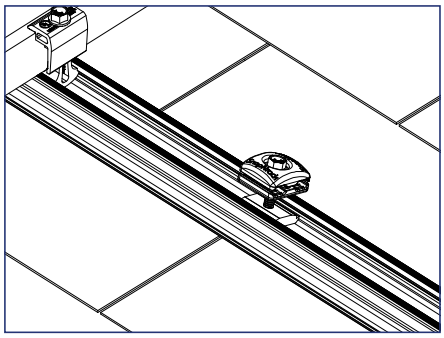

1) Snap Wire Clamp into top or side rail channel.

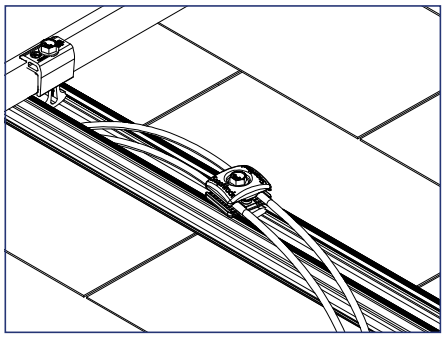

2) With Wire Clamp loose, place conductors or cables in slots.

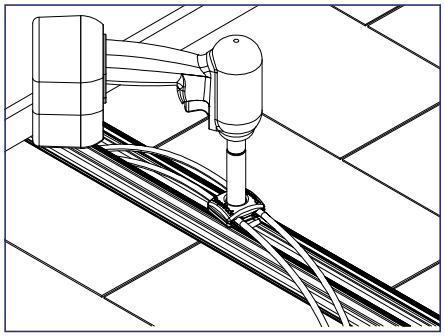

3) Tighten Wire Clamp with 1/2” socket, ensure cables and conductors are aligned in the clamp slots.

Install Note:
Wire Clamps can be rotated and oriented in any direction.

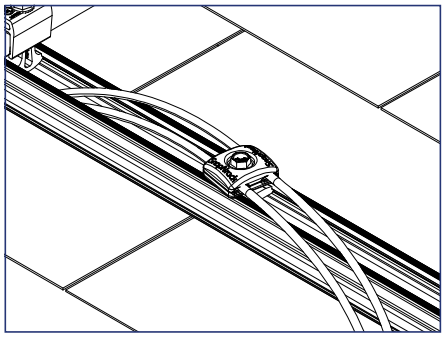

4) 4-Wire Clamp intended for PV Wire conductors, Trunk Cable Clamp intended for trunk cables, Universal Wire Clamp intended for both PV Wire conductors and AC trunk cables.

Install Note:
Conductors of different types should be placed under separate Universal Wire Clamps.

MLPE Installation

Required Tools

- Torque Wrench
- Socket Wrench
- 1/2” Socket

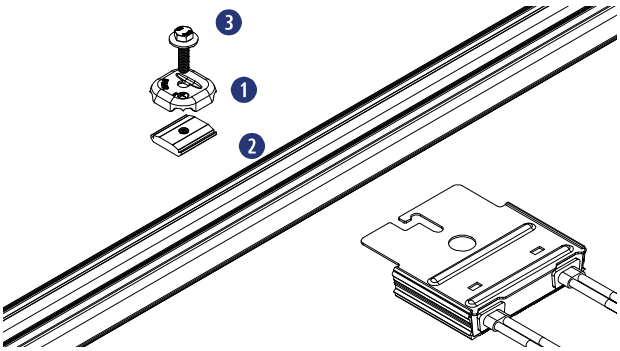

Materials Included - MLPE Rail Attachment Kit

1. (1) SnapNrack OmniLug Bracket
2. (1) SnapNrack Channel Nut
3. (1) 5/16”-18 X 1-1/4” SS SEMS Bolt

Other Materials Required

① (1) MLPE Unit

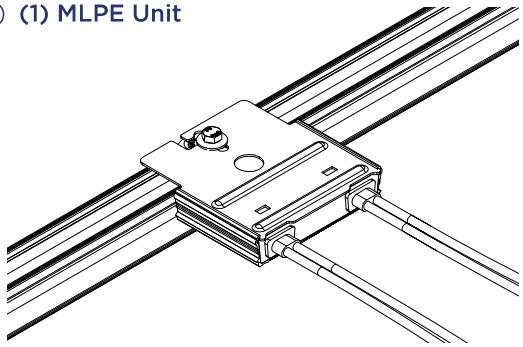

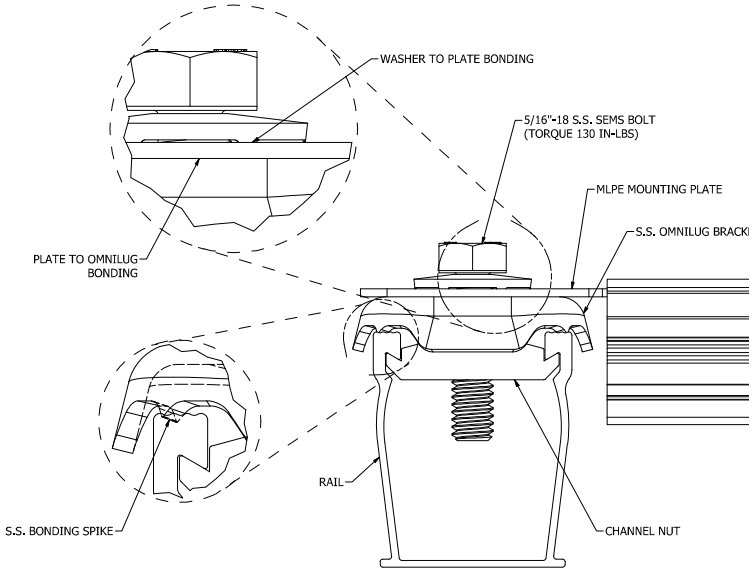

Materials Included - MLPE Frame Attachment Kit

1. (1) SnapNrack MLPE Frame Attachment Top
2. (1) SnapNrack MLPE Frame Attachment Bottom
3. (1) 5/16”-18 X 3/4” SS Flange Bolt
4. (1) SnapNrack Smart Clip II
5. (1) SnapNrack MLPE Frame Attachment SS Coil Spring

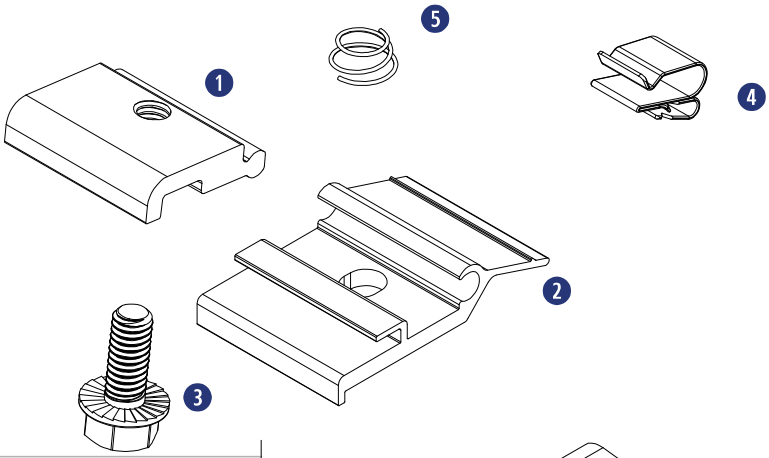

Other Materials Required

① (1) MLPE Unit

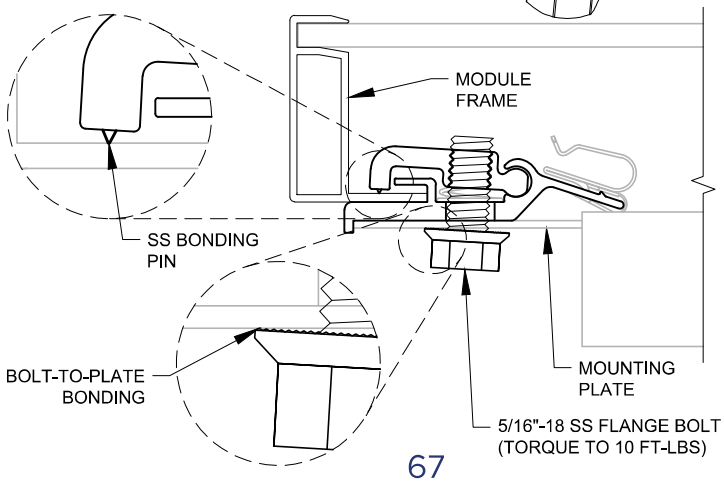

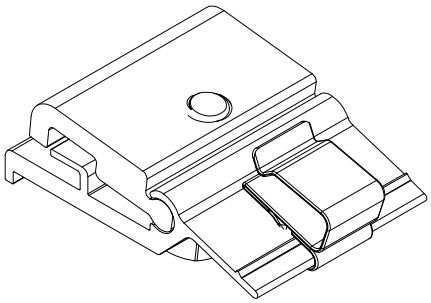

Materials Needed – SolarEdge Frame Mount

① (1) SolarEdge Optimizer w/ Frame-Mounted Module Add-On

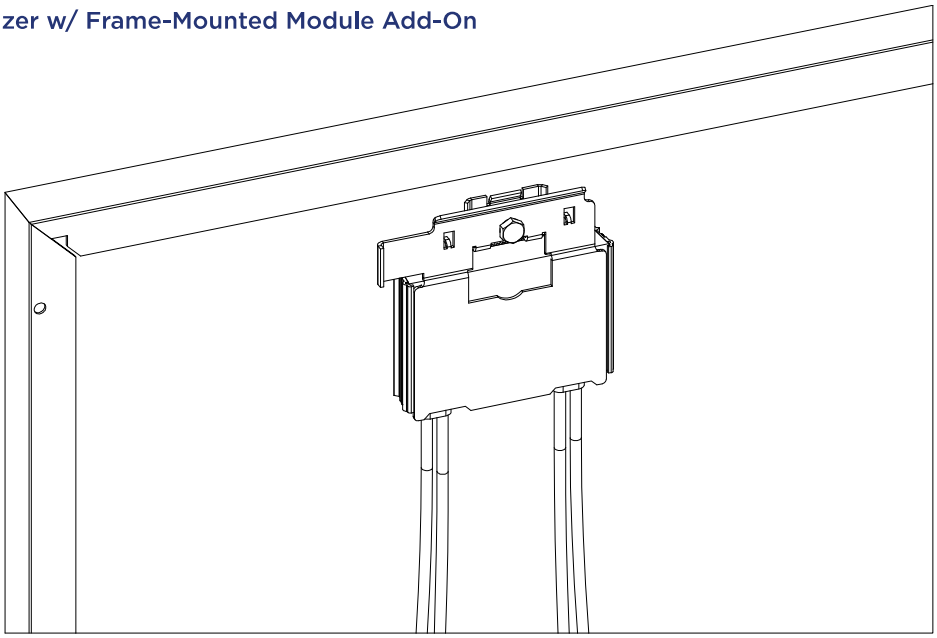

Materials Needed – Enphase Frame Mount

① (1) Enphase Microinverter

② (1) Enphase Frame Mount

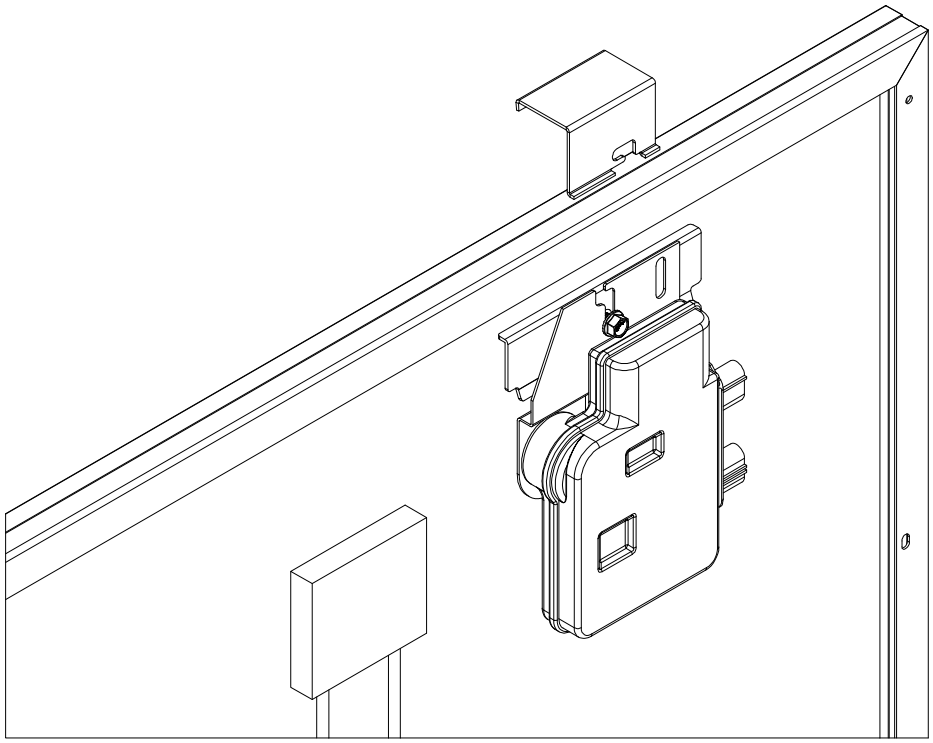

INSTALLATION INSTRUCTIONS - MLPE RAIL ATTACHMENT

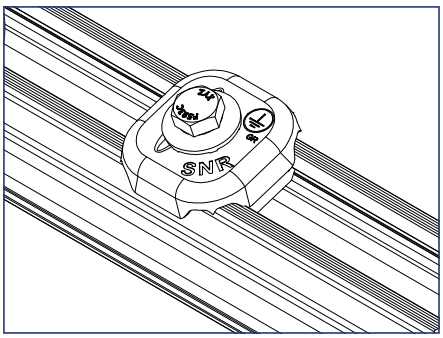

1) Snap the SnapNrack MLPE Rail Attachment Kit channel nut into the desired location on the rail where the microinverter will be installed.

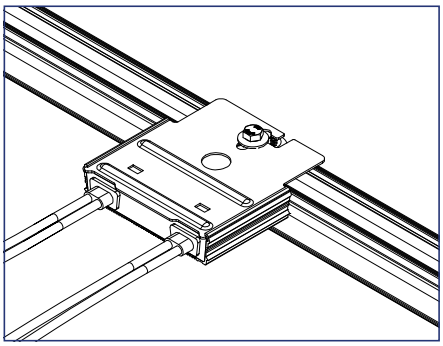

2) Install the microinverter mounting plate onto the SEMS bolt of the OmniLug.

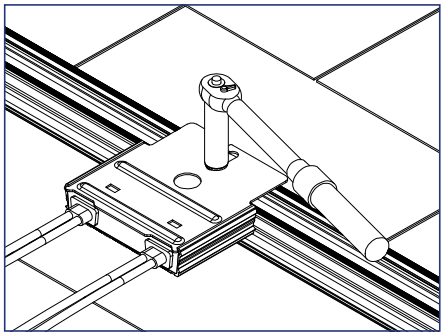

3) Tighten hardware to 130 in-lbs.

INSTALLATION INSTRUCTIONS - MLPE FRAME ATTACHMENT

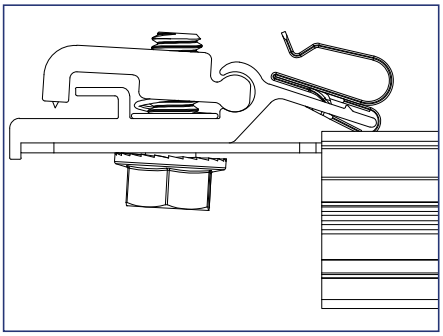

1) Slide the backplate channel of the MLPE device under the MLPE Frame Attachment Kit bolt. The MLPE mounting plate should rest against the MLPE mounting plate backstop on the MLPE Frame Attachment Kit.

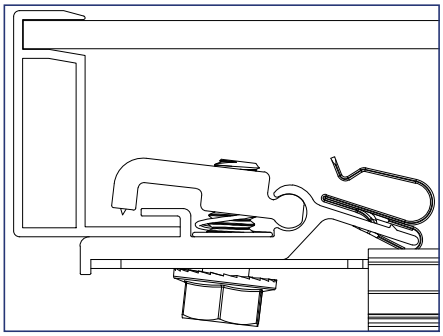

2) Position the MLPE Frame Attachment Kit on the module frame flange in a location that will not interfere with mounting system components. The module frame flange should rest against the module flange backstop on the MLPE Frame Attachment Kit.

Install Note:
Avoid blocking module frame drainage holes when installing the MLPE Frame Attachment Kit.

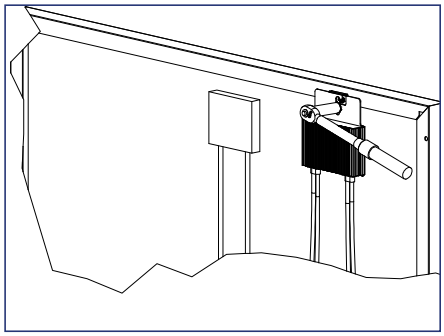

3) Tighten the mounting bolt on the MLPE Frame Attachment Kit to 10 ft-lbs.

Install Note:
The MLPE Frame Attachment Kit bonds the following components: Module Frame, MLPE backplate and Smart Clip.

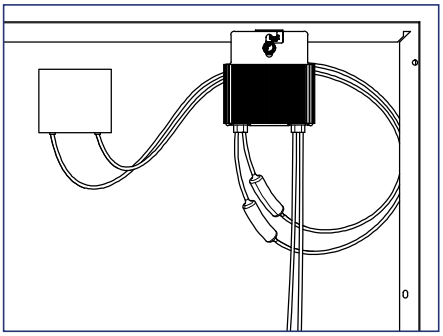

4) Connect the module leads to the input con-nectors on the MLPE device and manage con-ductors with the integrated Smart Clip.

INSTALLATION INSTRUCTIONS - SOLAREDGE FRAME MOUNT

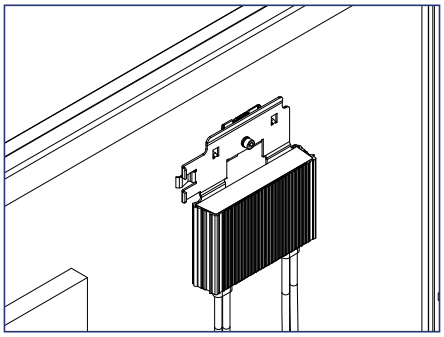

1) Locate the SolarEdge optimizer with Frame-Mounted Module Add-On at a location on the module frame that will not interfere with the SnapNrack rail.

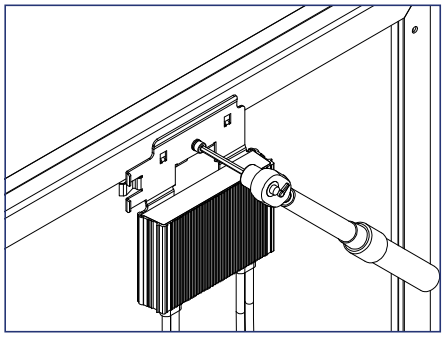

2) Install the optimizer mounting plate onto the module frame and tighten hardware to 7 ft-lbs.

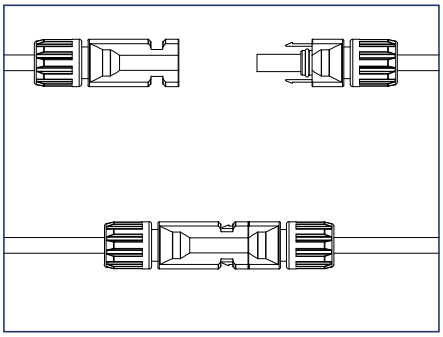

3) Connect the module leads to the input connectors on the optimizer.

Install Note:

Refer to the SolarEdge optimizer Frame-Mounted Module Add-On installation guide for additional instructions.

INSTALLATION INSTRUCTIONS - ENPHASE FRAME MOUNT

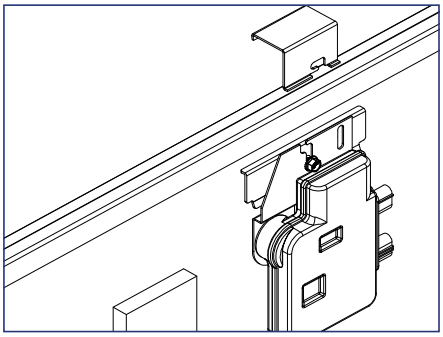

1) Locate the Enphase Frame Mount bracket clamp at a location on the module frame that will not interfere with the SnapNrack rail.

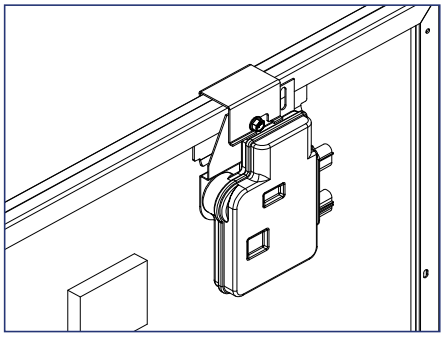

2) Slide the microinverter unit onto the bracket clamp, then move it slightly to the left.

Install Note:

The microinverter mounting flange should be on the outside of the module frame.

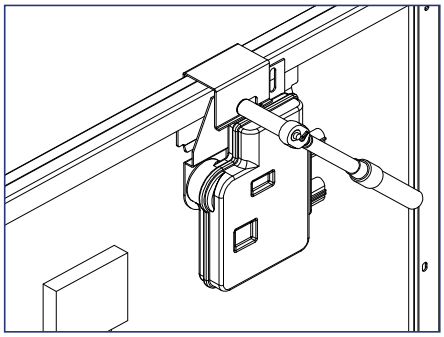

3) Tighten hardware to 13 ft-lbs

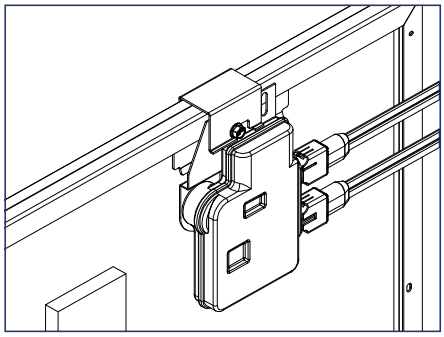

4) Connect the module leads to the microinverter DC connectors.

Install Note:

Refer to the Enphase Frame Mount installation guide for additional instructions.

System Bonding Methods

1. SnapNrack Ultra Rail Mid Clamp
2. SnapNrack Ultra Rail End Clamp
3. SnapNrack Mid Clamp
4. SnapNrack Adjustable End Clamp
5. SnapNrack UR-40 & UR-45 Rail Splice
6. SnapNrack UR-60 Rail Splice

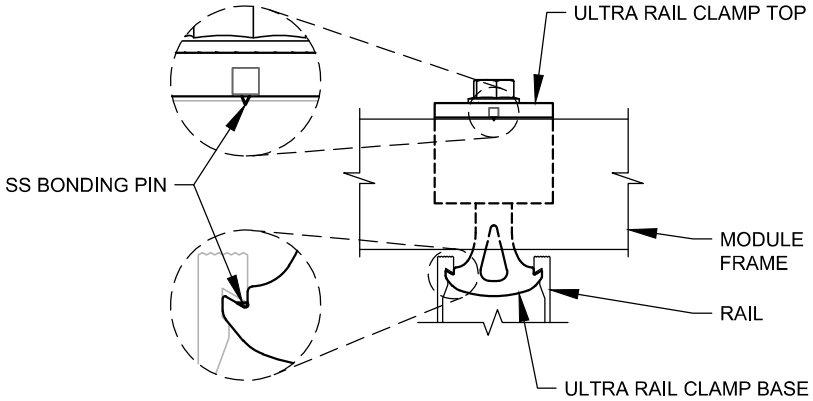

Note:
SnapNrack module clamps contain a SnapNrack Channel Nut with integral bonding clips or pins in assembly to properly bond the system (except Universal End Clamps).

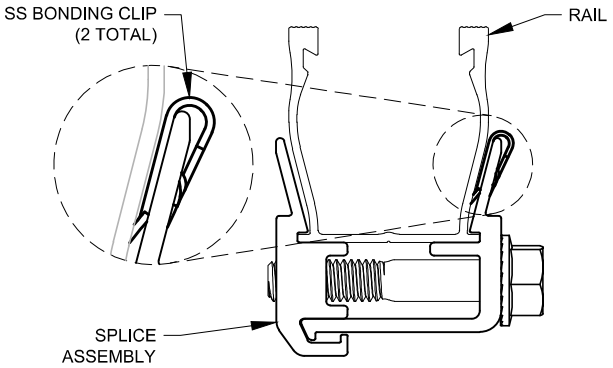

Note:
SnapNrack Ultra Rail Splices contain integral bonding clips in assembly to properly bond the system.

SnapNrack OmniLug Assembly

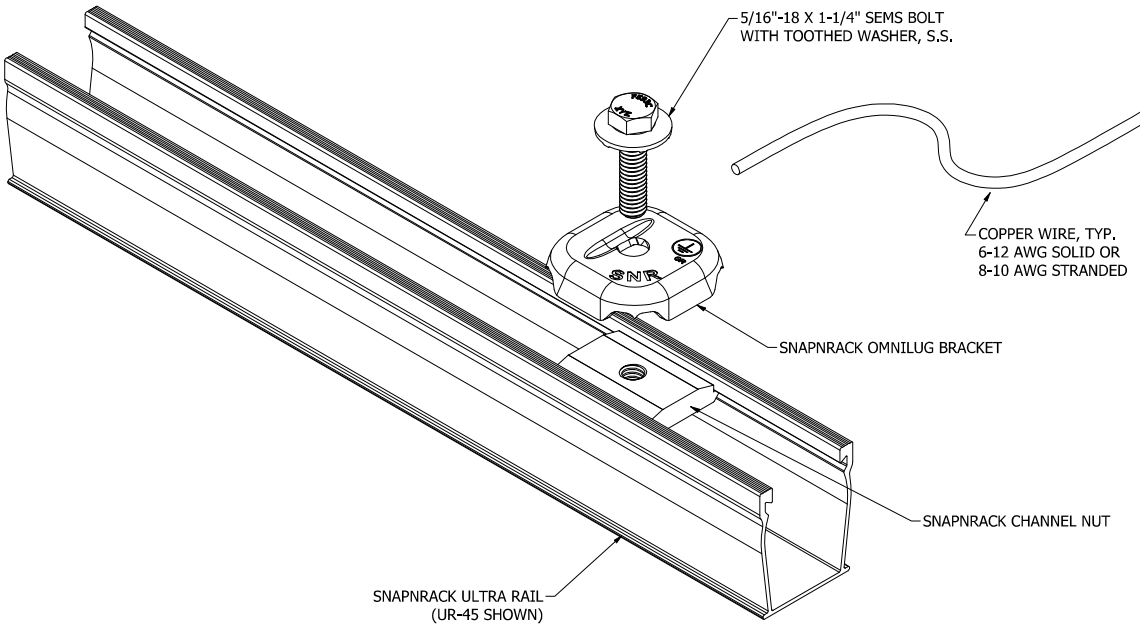

Grounding Specifications

snapnrack.com

Ilsco Lay-in Lug Assembly

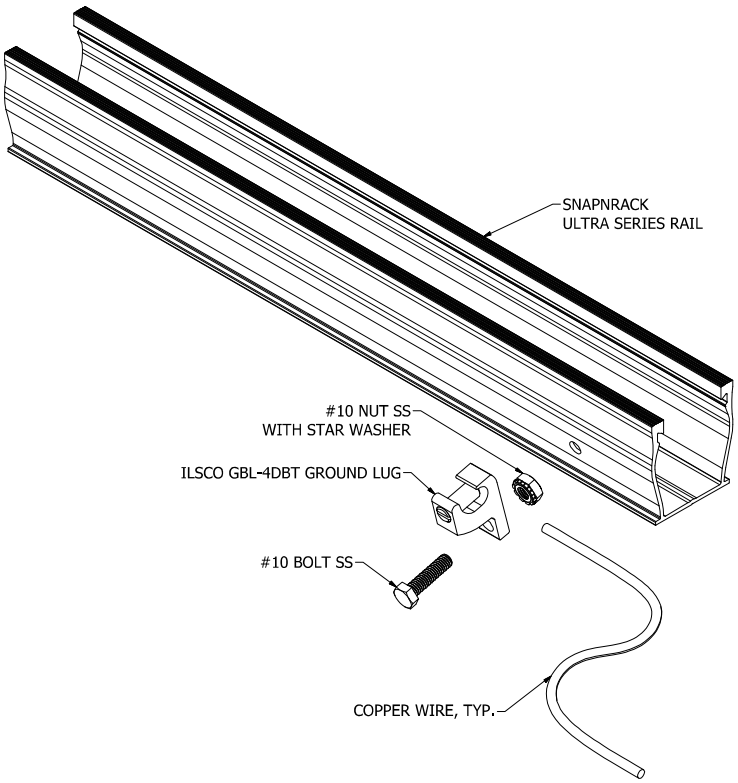

Ground Path Details

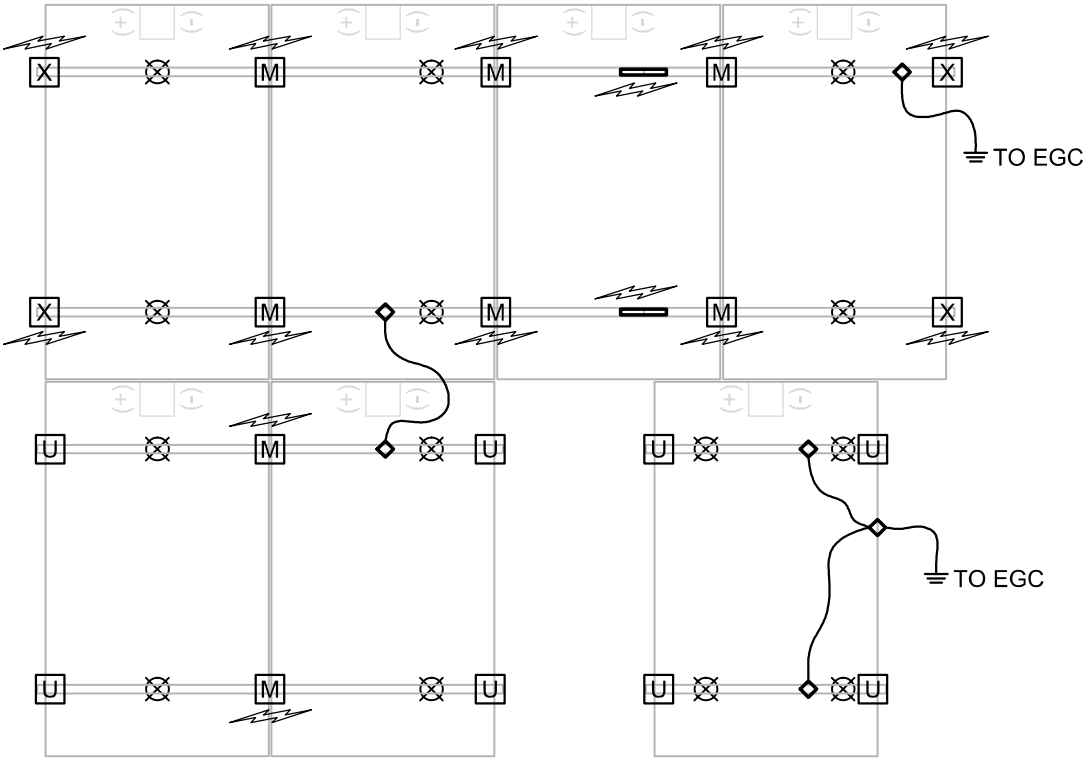

RAIL | RAIL SPLICE | MOUNT | GROUND LUG | M MODULE CLAMP
M = MIDCLAMP
X = X-END CLAMP
U = UNIVERSAL END CLAMP

GROUND PATH | EQUIPMENT GROUNDING CONDUCTOR

Ground Path Details - SolarEdge

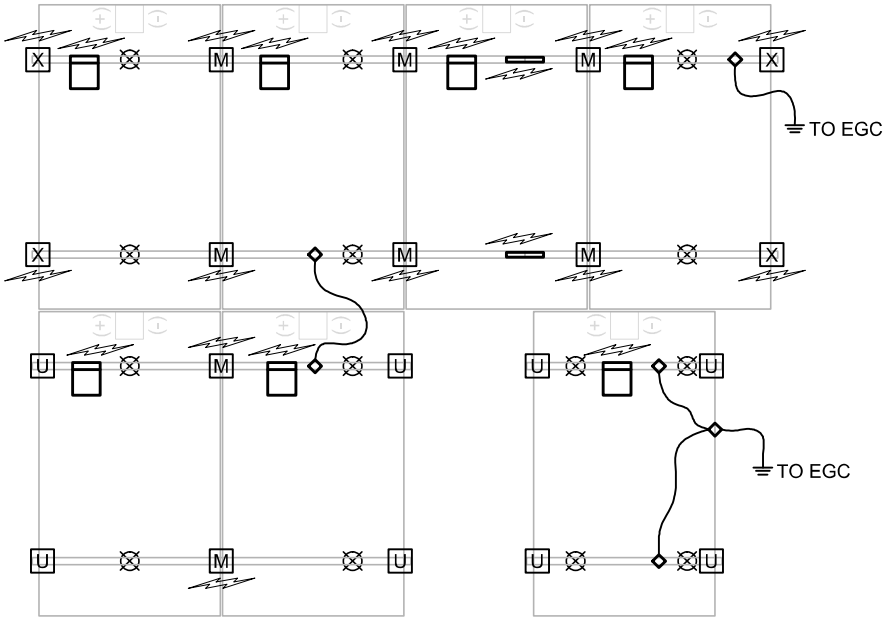

RAIL
RAIL SPLICE
MOUNT
GROUND LUG
M MODULE CLAMP
M = MIDCLAMP
X = X-END CLAMP
U = UNIVERSAL END CLAMP
GROUND PATH
EQUIPMENT GROUNDING CONDUCTOR
SOLAREDGE OPTIMIZER

Ground Path Details - Enphase

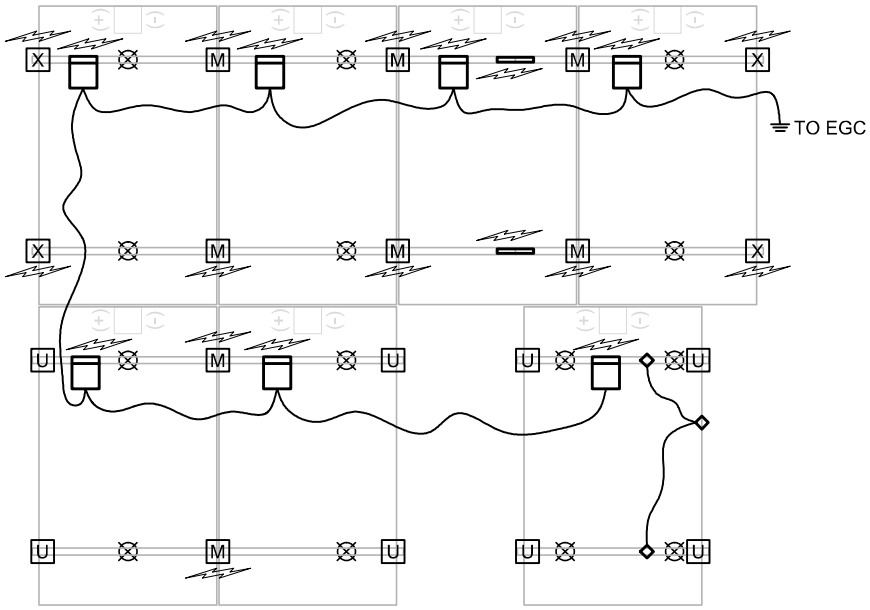

RAIL
RAIL SPLICE
MOUNT
GROUND LUG
M MODULE CLAMP
M = MIDCLAMP
X = X-END CLAMP
U = UNIVERSAL END CLAMP
GROUND PATH
EQUIPMENT GROUNDING CONDUCTOR
ENPHASE MICRO-INVERTER

Grounding Specifications

snapnrack.com

INSTALLATION INSTRUCTIONS - SNAPNRACK OMNILUG

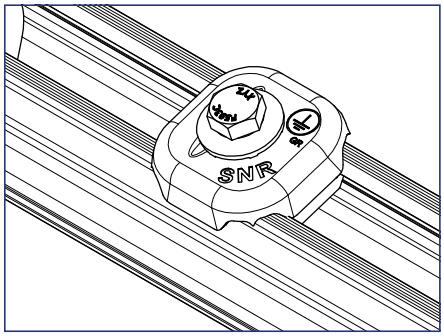

1) Snap the SnapNrack OmniLug into the rail channel on **one rail per module row.**

Install Note:
SnapNrack OmniLug may be used in side or top channel, and may be rotated 90 degrees relative to slot to facilitate running copper across top of rails.

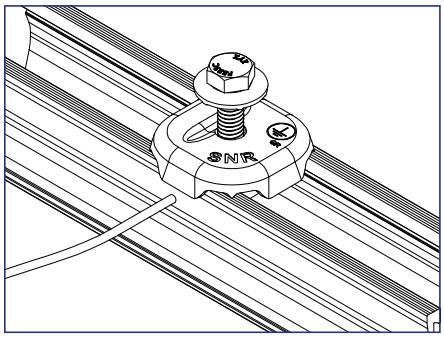

2) Place grounding conductor into slot underneath the washer.

Install Note:
SnapNrack OmniLug is Listed for use with 6-12 AWG solid or 8-10 AWG stranded copper conductors.

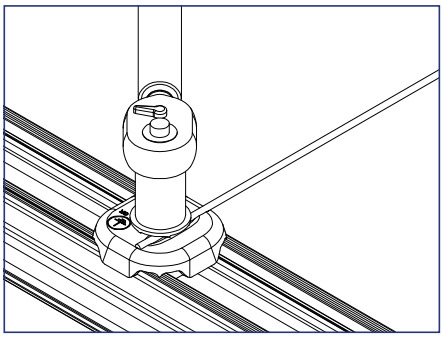

3) Tighten hardware to 130 in-lbs.

INSTALLATION INSTRUCTIONS - ILSCO LAY-IN LUG

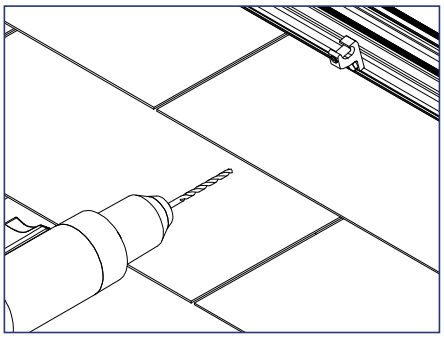

1) Drill and deburr a 1/4" hole in the back side of the rail for the Ilsco lug to attach to, place the bolt through the hole, and attach the lug assembly on **one rail per module row.**

Install Note:
Torque rail connection to 35 in-lbs.

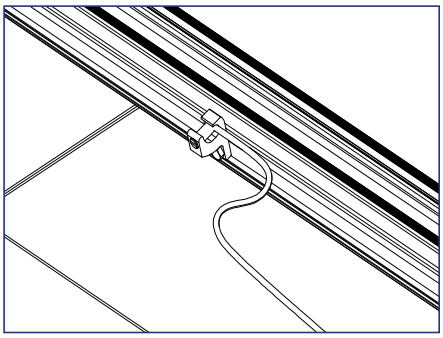

2) Place grounding conductor into slot.

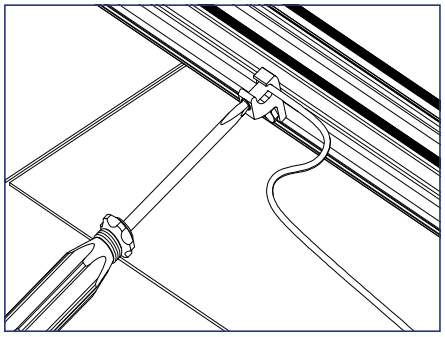

3) Tighten set screw per Ilsco's recommendation (see below).

Install Note:
Torque set screw to 20 in-lbs for #10-#14 solid and stranded copper, 25 in-lbs for #8 stranded copper, and 35 in-lbs for #4-#6 stranded copper.

Note:

- System has been evaluated to a maximum overcurrent device (OCD) protection level of 20 Amps.
- Universal End Clamp (UEC) does not bond module to rail. Be sure to separately ground any modules that are only secured by UECs, especially during servicing.
- SnapNrack recommends that bare copper never come into contact with aluminum.
- SnapNrack OmniLug: torque bolt to 130 in-lbs. The Ground Lug may be used in side or top channel. It may be rotated 90 degrees relative to slot to facilitate running copper across top of rails.
- Grounding with a standard Ilsco GBL-4DBT Lug is a listed alternate and requires drilling of a hole in the rail.
- Ilsco hardware connection to rail: 5 ft-lbs. Torque for lug set screw: #10-#14 solid and stranded copper- 20 in-lbs, #8 stranded copper- 25 in-lbs, #4-#6 stranded copper- 35 in-lbs.

Ground Path Details - DynoBond

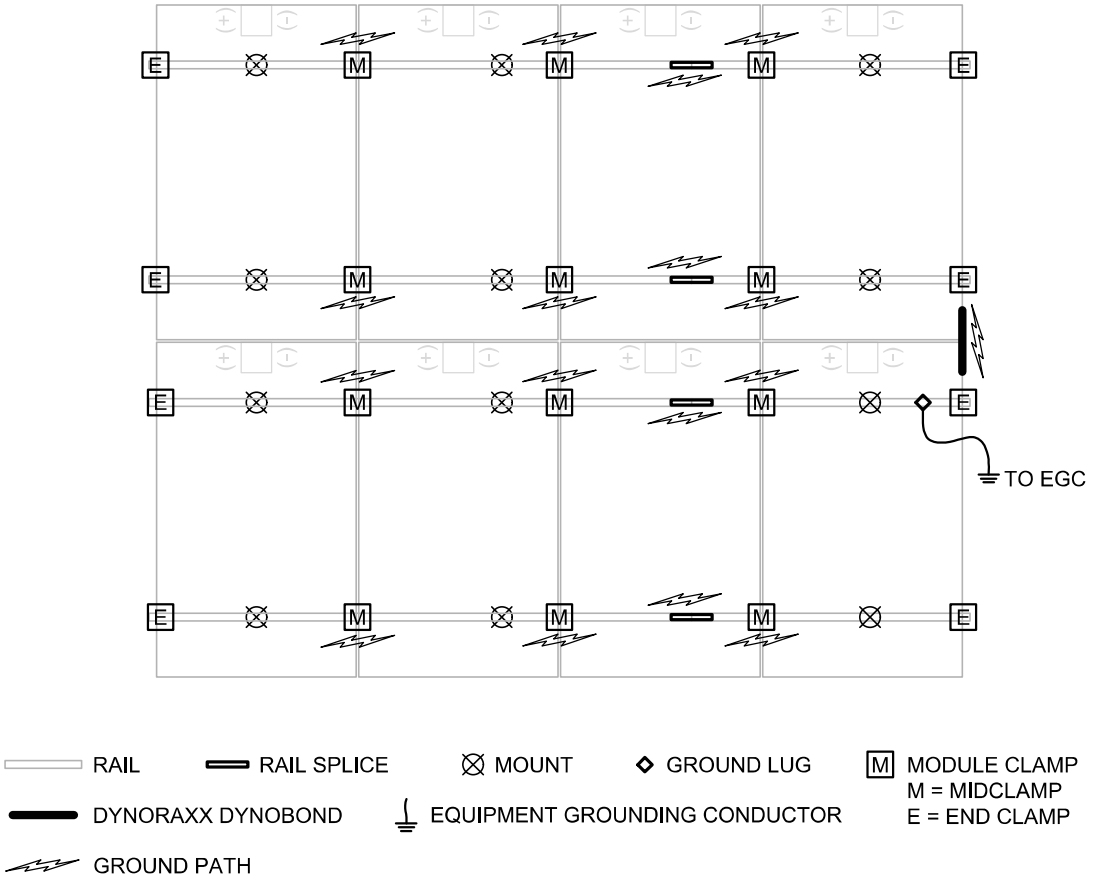

R/C (QIMS2), DynoRaxx (E357716) photovoltaic bonding jumper cat. no. DynoBond is an optional component that may be used with this system. The DynoBond jumper has been evaluated to provide module to module bonding. The DynoBond device attaches to the frame flange of adjacent modules.

Grounding Specifications

GROUNDING MARKING DETAILS

All components included in the Ultra Rail UL 2703 Listing for grounding/bonding are packaged and marked with the UL logo, SnapNrack File E359313, and "PV Mounting System"

The SnapNrack OmniLug is marked with the ground symbol
Ilsco Ground Lugs have green colored set screws or bolts to indicate connection to the grounding electrode conductor

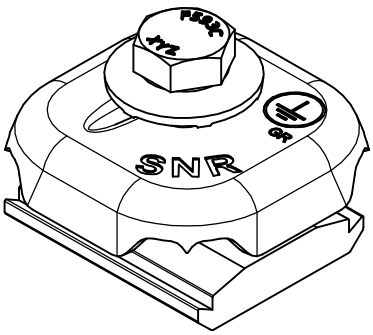

INSTRUCTION FOR MAINTAINING THE GROUNDING BONDING WHEN REMOVING A MODULE FOR SERVICING

CAUTION: Module removal may disrupt the bonding path and could introduce the risk of electric shock. Additional steps may be required to maintain the bonding path. Modules should only be removed by qualified persons in compliance with the instructions in this manual.

Module removal is not presented as a frequently expected occurrence and will not be required as part of routine maintenance.

Scenarios that could result in a disruption of the bonding path are, for example irregularly-shaped arrays, arrays consisting of individual rows, and any other scenario where module removal could disrupt the bonding path.

In most cases, the removal of a module for servicing will not disturb or break grounding continuity because SnapNrack Ultra Rail systems are bonded through the rail. If a module is to be removed that will break continuity, these are the steps that must be taken to maintain a continuously bonded SnapNrack Ultra Rail system.

Required Tools

- Socket Wrench
- Torque Wrench
- 1/2" Socket
- 7/16" Socket

Required Materials

1. #10 Or Larger Bare Copper Conductor
2. SnapNrack SKU 242-10034
3. Ilsco Part No. SGB-4
4. DnoRaxx Dynobond™

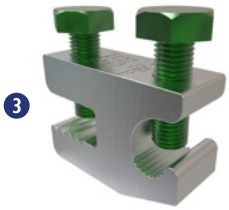

Maintaining the Grounding Bonding When Removing a Module

JUMPER ASSEMBLY INSTRUCTION & INSTALLATION

CAUTION: Do Not Remove the Module until the Jumper is installed

1) Identify the existing ground path at the location of module removal and choose an appropriate length of #10 bare copper to bridge the soon to be broken ground path.

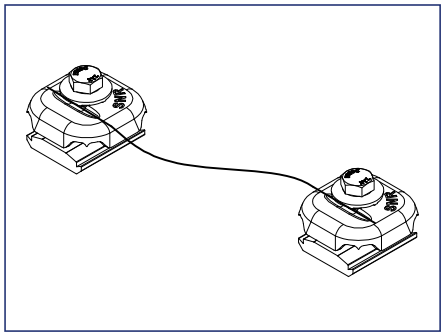

Example of assembled bonding jumper using (2) SnapNrack OmniLugs

2) Attach one ground lug to each end of #10 bare copper wire. See recommended options below:

1. (2) SnapNrack SKU: 242-10034
2. (2) Ilsco part no. SGB-4
3. (1) SnapNrack part no. 242-10034 & (1) Ilsco part no. SGB-4
4. (1) DroRaxx DynoBond™

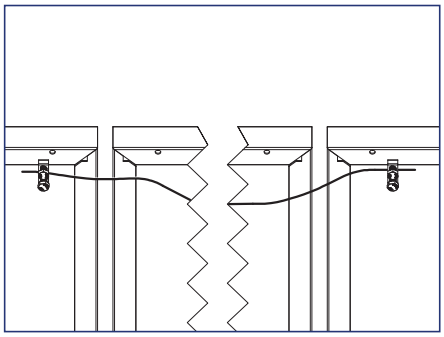

3) Before the module is removed, attach the assembled bonding jumper. Depending on where the module will be removed and choice of ground lug, jumper attachment locations will vary.

- Ilsco SGB-4 lugs can be attached to SnapNrack Ultra Rail, or module frames
- SnapNrack Ground Lug can only be attached to SnapNrack Ulra Rail
- DynoRaxx DynoBond™ is approved and appropriate when a short bonding jumper is needed from module to module, or module to rail

4) Service the array. With the bonding jumper installed, it is now safe to remove the module for service or maintenance.

5) After Servicing the array reinstall the module and original ground path. Only then remove the bonding jumper.

Caution: Do not remove the bonding jumper until original ground path is established.

Approved Modules

Ultra Rail has been tested with the following UL Listed modules:

The Ultra Rail System employs top-down clamps which have been evaluated for frame-to-system bonding, at specific mounting torques and with the specific modules listed below.

Ultra Rail has been tested with the following UL Listed module series: The Ultra Rail System employs top-down clamps which have been evaluated for frame-to-system bonding, at specific mounting torques and with the specific module series listed below. All wattage values are covered.

Manufacturer	Model	
Aptos Solar	DNA-120-MF23-XXX	DNA-120-BF26-XXXW
	DNA-120-BF23-XXX	DNA-144-BF26-XXXW
	DNA-144-MF23-XXX	DNA-108-BF10-XXXW
	DNA-144-BF23-XXX	DNA-120-BF10-XXXW
	DNA-120-MF26-XXXW	DNA-108-MF10-XXXW
	DNA-144-MF26-XXXW	
Boviet Solar	BVM6610P-XXX	BVM6612M-XXX
	BVM6610M-XXX	BVM7612M-XXX-H-HC-BF-DG
	BVM6612P-XXX	
Canadian Solar	CS6K-XXX-M	CS3U-XXX-MS
	CS6K-XXX-M-SD	CS3U-XXX-P
	CS6K-XXX-P	CS1K-XXX-MS
	CS6K-XXX-P-SD	CS1H-XXX-MS
	CS6K-XXX-MS	CS1H-XXX-MS-AB
	CS6P-XXX-M	CS3W-XXX-P
	CS6P-XXX-P	CS3N-XXX-MS
	CS6P-XXX-P-SD	CS1Y-XXX-MS
	CS6V-XXX-M	CS3W-XXXMB-AG
	CS6V-XXX-P	CS3Y-XXXMB-AG
	CS6X-XXX-P	CS6W-XXXMB-AG
	CS3K-XXX-P	CS6R-XXXMS-HL
	CS3K-XXX-MS	CS3W-XXX-MS
	CS6.1-54TM-XXXH	
CertainTeed	CTXXXHC11-06	
Chint Solar	CHSM6612M-XXX	CHSM72M-HC-XXX* (Astro 4)
	CHSM6612M(BL)-XXX	CHSM72M-HC-XXX* (Astro 5)
	CHSM6612M/HV-XXX	
Dehui Solar	DH-M760B-XXXW	DH-M760F-XXXW*
	DH-M760W-XXXW	DH-M772F-XXXW*
	DH-M772W-XXXW	
ET Solar	ET-P660XXXBB	P660XXXWB/WW
	ET-P660XXXWB	P660XXXWWG
	ET-P660XXXWW	M660XXXBB
	ET-P660XXXWWG	M660XXXWW
Freedom Forever	FF-MP-BBB-xxx	

Approved Modules

snapnrack.com

Manufacturer	Model	
Hanwha Q Cells	Q.PEAK BLK-G3.1-XXX	Q.TRON BLK M-G2+ XXX
	Q.PEAK G3.1-XXX	Q.PEAK DUO-L-G7.3-XXX
	Q.PLUS BFR-G3.1-XXX	Q.PEAK DUO-L-G6-XXX
	B.LINE PLUS BFR-G4.1-XXX	Q.PEAK DUO-L-G6.2-XXX
	B.LINE PRO BFR-G4.1-XXX	Q.PEAK DUO-L-G6.3-XXX
	Q.BASE GY-XXX	Q.PEAK DUO-L-G8-XXX
	Q.PEAK BFR-G4-XXX	Q.PEAK DUO-L-G8.1-XXX
	Q.PEAK BFR-G4.1-XXX	Q.PEAK DUO-L-G8.2-XXX
	Q.PEAK BLK-G4.1-XXX	Q.PEAK DUO-L-G8.3-XXX
	Q.PEAK BLK-G4.1/TAA-XXX	Q.PEAK DUO-G5/SC-XXX
	Q.PEAK G4-XXX	Q.PEAK DUO-BLK-G5/SC-XXX
	Q.PEAK G4.1-XXX	Q.PEAK DUO-G6+/SC-XXX
	Q.PEAK G4.1/MAX-XXX	Q.PEAK DUO-BLK-G6+/SC-XXX
	Q.PEAK G4.1/TAA-XXX	Q.PEAK DUO BLK-G6+/AC-XXX
	Q.PLUS BFR-G4-XXX	Q.PEAK DUO-ML-G9-XXX
	Q.PLUS BFR-G4.1-XXX	Q.PEAK DUO-BLK-ML-G9-XXX
	Q.PLUS BFR-G4.1/TAA-XXX	Q.PEAK DUO-BLK-G9-XXX
	Q.PLUS G4-XXX	Q.PEAK DUO-BLK-G9+-XXX
	Q.PLUS GY-XXX	Q.PEAK DUO-ML-G9+-XXX
	Q.PLUS BFR-GY-XXX	Q.PEAK DUO-BLK-ML-G9+-XXX
	Q.PRO BFR-G4-XXX	Q.PEAK DUO-G5/TS-XXX
	Q.PRO BFR-G4.1-XXX	Q.PEAK DUO BLK-G5/TS-XXX
	Q.PRO BFR-G4.3-XXX	Q.PEAK DUO-G6/TS-XXX
	Q.PRO BFR-GY-XXX	Q.PEAK DUO BLK-G6/TS-XXX
	Q.PRO BLK-GY-XXX	Q.PEAK DUO-G6+/TS-XXX
	Q.PRO G4-XXX	Q.PEAK DUO BLK-G6+/TS-XXX
	Q.PRO GY-XXX	Q.PEAK DUO XL-G9.2-XXX
	Q.PRO GY/SC-XXX	Q.PEAK DUO XL-G9.3-XXX
	Q.PEAK DUO-G5-XXX	Q.PEAK DUO XL-G9.3/BFG-XXX*
	Q.PEAK DUO-BLK-G5-XXX	Q.PEAK DUO XL-G10.2-XXX
	Q.PLUS DUO-G5-XXX	Q.PEAK DUO XL-G10.3/BFG-XXX*
	Q.PEAK DUO-G7-XXX	Q.PEAK DUO XL-G10.3-XXX
	Q.PEAK DUO-BLK-G7-XXX	Q.PEAK DUO XL-G10.c-XXX
	Q.PEAK DUO-G7.2-XXX	Q.PEAK DUO XL-G10.d-XXX
	Q.PEAK DUO-G6+-XXX	Q.PEAK DUO L-G8.3/BFG-XXX*
	Q.PEAK DUO-BLK-G6+-XXX	Q.PEAK DUO L-G8.3/BGT-XXX*
	Q.PEAK DUO-G6-XXX	Q.PEAK DUO ML-G10-XXX
	Q.PEAK DUO-BLK-G6-XXX	Q.PEAK DUO BLK ML-G10+-XXX
	Q.PEAK DUO-G8+-XXX	Q.PEAK DUO ML-G10+-XXX
	Q.PEAK DUO-BLK-G8+-XXX	Q.PEAK DUO BLK ML-G10-XXX
	Q.PEAK DUO-G8-XXX	Q.PEAK DUO ML-G10.a+-XXX
	Q.PEAK DUO-BLK-G8-XXX	Q.PEAK DUO BLK ML-G10.a+-XXX
	Q.PLUS L-G4-XXX	Q.PEAK DUO ML-G10.a-XXX
	Q.PLUS L-G4.1-XXX	Q.PEAK DUO BLK ML-G10.a-XXX

Approved Modules

snapnrack.com

Manufacturer	Model	
Hanwha Q Cells	Q.PLUS L-G4.2-XXX	Q.PEAK DUO BLK ML-G10.a+/TS-XXX
	Q.PEAK L-G4.1-XXX	Q.PEAK DUO BLK G10-XXX
	Q.PEAK L-G4.2-XXX	Q.PEAK DUO G10+-XXX
	Q.PLUS DUO-L-G5-XXX	Q.PEAK DUO BLK G10+-XXX
	Q.PLUS DUO-L-G5.1-XXX	Q.PEAK DUO BLK G10+/AC XXX
	Q.PLUS DUO-L-G5.2-XXX	Q.PEAK DUO BLK G10+/HL XXX
	Q.PLUS DUO-L-G5.3-XXX	Q.PEAK DUO BLK ML-G10+/t-XXX
	Q.PEAK DUO-L-G5.2-XXX	Q.PEAK DUO XL-G11.3 XXX
	Q.PEAK DUO-L-G5.3-XXX	Q.PEAK DUO XL-G11.3 BFG XXX
	Q.PEAK DUO-L-G7-XXX	Q.TRON-G1+ XXX
	Q.PEAK DUO-L-G7.1-XXX	Q.TRON BLK-G1+ XXX
	Q.PEAK DUO-L-G7.2-XXX	Q.TRON M-G2+ XXX
	Q.TRON XL-G2.3/BFG XXX	Q.TRON BLK M-G2+/AC XXX
	Q.PEAK DUO G10-XXX	Q.TRON BLK M-G2+ XXX
Hanwha SolarOne	HSL60P6-PB-2-XXXQ	HSL60P6-PB-4-XXXQ
Hansol	HAXXXAA-NNEA0	
Heliene	60M-XXX	72M-XXX
	60P-XXX	72P-XXX
HT-SAAE	HT60-166M-XXX	HT60-182M-XXX
Hyperion/Runergy	HY-DH108P8-XXX(Y)	HY-DH144N8-XXX
	HY-DH144P8-XXX	HY-DH108N8-XXX
Hyundai	HiS-MXXXRG	HiA-SXXXMS
	HiS-SXXXRG	HiS-SXXXXY
	HiS-SXXXRW	HiS-SXXXYI
	HiS-MXXXMG	HiS-SXXXYH(BK)
	HiS-SXXXMG	HiN-SXXXXG(BK)
	HiD-SXXXRG	All may be followed by (BK)
JA Solar	JAM6-60-XXX/SI	JAM72S10-XXX/MR
	JAP6-60-XXX/3BB	JAM72S10-XXX/PR
	JAM60S09-XXX/PR	JAM72S12-XXX/PR
	JAM60S10-XXX/MR	JAP6(k)-72-XXX/4BB
	JAM60S10-XXX/PR	JAM60S17-XXX/MR
	JAM60S12-XXX/PR	JAM54S30-XXX/MR
	JAP72S01-XXX/SC	JAM54S31-XXX/MR
	JAM72S09-XXX/PR	JAM72D30-XXX/MB
	JAM72D10-XXX/MB	

Approved Modules

Manufacturer	Model	
Jinko Solar	JKMXXXM-60	JKMXXXP-72-V
	JKMXXXM-60L	JKMXXXPP-72
	JKMXXXM-60HL	JKMXXXPP-72-V
	JKMXXXM-60HBL	JKMSXXXP-72
	JKMXXXP-60	JKMXXXM-72HL-V
	JKMXXXP-60-J4	JKMXXXM-72HL-TV
	JKMXXXP-60-V	JKMXXXM-72HBL
	JKMXXXP-60B-J4	JKMXXXM-6TL3-B
	JKMXXXPP-60	JKMXXXM-6RL3-B
	JKMXXXPP-60-V	JKMXXXM-7RL3-V
	JKMXXXM-72	JKMXXXM-7RL3-TV
	JKMXXXM-72L-V	JKMXXXM-72HL4-V
	JKMXXXP-72	JKMXXXM-72HL4-TV
KB Solar	MODULE-KBS-375-MONO	MODULE-KBS-450-MONO
	MODULE-KBS-375-MONO-BF	MODULE-KBS-450-MONO-BF
Kyocera	KUXXX-6YYY	KUXXX-8YYY
LG	LGXXXN1C-A5	LGXXXA1C-V5
	LGXXXN1K-A5	LGXXXM1C-L5
	LGXXXQ1C-A5	LGXXXM1K-L5
	LGXXXQ1K-A5	LGXXXN1C-N5
	LGXXXS1C-A5	LGXXXN1K-L5
	LGXXXN2C-B3	LGXXXN1K-A6
	LGXXXN2W-B3	LGXXXN1C-A6
	LGXXXN1C-G4	LGXXXN1W-A6
	LGXXXN1K-G4	LGXXXQ1C-A6
	LGXXXS1C-G4	LGXXXQ1K-A6
	LGXXXN2C-G4	LGXXXM1K-A6
	LGXXXN2K-G4	LGXXXM1C-A6
	LGXXXN2W-G4	LGXXXA1C-A6
	LGXXXS2C-G4	LGXXXQAC-A6
	LGXXXS2W-G4	LGXXXQAK-A6
	LGXXXN1C-V5	LGXXXN1K-B6
	LGXXXN1W-V5	LGXXXN2W-E6
	LGXXXN2T-V5	LGXXXN2T-E6
	LGXXXN2T-J5	LGXXXN1K-E6
	LGXXXN1T-V5	LGXXXN3K-V6
Longi	LR6-60-XXXM	LR4-60HPB-XXXM
	LR6-60BK-XXXM	LR4-60HIB-XXXM
	LR6-60HV-XXXM	LR4-60HPH-XXXM
	LR6-60PB-XXXM	LR4-60HIH-XXXM
	LR6-60PE-XXXM	LR6-60HIH-XXXM
	LR6-60PH-XXXM	LR6-60HIB-XXXM
	LR6-60HPB-XXXM	LR4-72HPH-XXXM

Approved Modules

Manufacturer	Model	
Longi	LR6-60HPH-XXXM	LR5-54HPB-XXXM
	LR5-54HABB-XXXM (2.0+2.0)	
Meyer Burger	Meyer Burger Black*	Meyer Burger White*
mSolar	TXI6-XXX120BB	TXI10-XXX108BB
Mitrex	MXXX-I3H	MXXX-A1F
Mission Solar	MSEXXXSO5T	MSEXXXSR8K
	MSEXXXSO5K	MSEXXXSR8T
	MSEXXXSQ5T	MSEXXXSR9S
	MSEXXXSQ5K	MSE60AXXX
	MSEXXXMM4J	MSEXXXTS60
	MSEXXXMM6J	MSEXXXSX5K
	MSEXXXSO6W	MSEXXXSX5T
	MSEXXXSO4J	MSEXXXSX6S
	MSEXXXSO6J	MSEXXXSX6W
	MSEXXXSQ6S	MSEXXXSX5R
	MSEXXXSQ4S	MSE410HT0B
	MSEXXXSX9R	
Next Energy Alliance	USNEA-XXXM3-60	USNEA-XXXM3-72
	USNEA-XXXM3B-60	USNEA-XXXM3B-72
Panasonic	VBHNXXXKA01	VBHXXXRA18N
	VBHNXXXKA02	VBHXXXRA03K
	VBHNXXXSA16	EVPVXXX(K)
	VBHNXXXKA03	EVPVXXXH
	VBHNXXXKA04	EVPVXXXPK
	VBHNXXXSA17	EVPVXXXHK
	VBHNXXXSA18	EVPVXXXHK2
	VBHN325SA17E	
Philadelphia Solar	PS-M144(HCBF)-XXXW	PS-M108(HC)-XXXW
	PS-M108(HCBF)-XXXW	
Phono Solar	PSXXXM-20/U	PSXXXM8GF-18/VH
	PSXXXMH-20/U	PSXXXM8GFH-18/VH
	PSXXXM8GF-24/TH	PSXXXM6-24/TH
	PSXXXM8GFH-24/TH	
REC	RECXXXPE	RECXXXTP2M 72 BLK2
	RECXXXPE-BLK	RECXXXTP2SM 72
	RECXXXTP	RECXXXTP2SM 72 BLK
	RECXXXTP-BLK	RECXXXTP2SM 72 BLK2
	RECXXXTP IQ	RECXXXAA

Approved Modules

Manufacturer	Model	
REC	RECXXXTP2	RECXXXTP3
	RECXXXTP2-BLK	RECXXXTP3M
	RECXXXNP	RECXXXTP4
	RECXXXTP2M	RECXXXAA Pure
	RECXXXTP72	RECxxxAA Pure-R
	RECXXXPE72	RECXXXNP2
	RECXXXPE72XV	RECxxxNP3
	RECXXXTP2M 72	All may be followed by BLK or BLACK
	RECXXXTP2M 72 BLK	
Renesola	JCXXXM-24/Bb	JCXXXM-24/BBh
SEG Solar	SEG-400-BMB-HV	SEG-XXX-BMD-HV
	SEG-400-BMB-TB	SEG-XXX-BMD-TB
	SEG-XXX-BTD-BG	
Silfab	SLAXXX-M	SILXXXNT
	SLAXXX-P	SILXXXHL
	SSAXXX-M	SILXXXBK
	SSAXXX-P	SILXXXHC
	SILXXXBL	SILXXXNU
	SILXXXML	SILXXXNX
	SLGXXXNL	SILXXXHN
	SLGXXX-M	SILXXXBG
	SLGXXX-P	SIL-XXXHC+
	SSGXXX-M	SIL-XXX-HM
	SSGXXX-P	SIL-XXX-QD
	SIL-XXX-QM	
Solar4America	S4AXXX60H5BB	S4AXXX72H5BB
	S4AXXX60H5BW	S4AXXX72H5BW
	S4AXXX60M5BB	S4AXXX72M5BB
	S4AXXX60M5BW	S4AXXX72M5BW
	S4AXXX-108TH10BB	S4AXXX-144TH10STT
	S4AXXX-144TH16STT	
Solaria	Solaria PowerXT-XXXR-PX	Solaria PowerXT-XXXR-PM
	Solaria PowerXT-XXXR-BX	Solaria PowerXT-XXXR-PM-AC
	Solaria PowerXT-XXXR-AC	
SolarWorld	SWXXX-Mono	SWXXX-Mono XL

Approved Modules

Manufacturer	Model	
Suniva	MVX-XXX-60-5-701	OPT-XXX-60-4-1B0
	MVX-XXX-60-5-7B1	OPT-XXX-60-4-800
	OPT-XXX-60-4-100	OPT-XXX-60-4-8B0
Sunpower	SPR-EYY-XXX	SPR-AXXX
	SPR-XYY-XXX	SPR-AXXX-BLK-G-AC
	SPR-EYY-XXX	SPR-AXXX-BLK
	SPR-XYY-XXX	SPR-MXXX-H-AC
	SPR-P17-XXX-COM	SPR-MXXX
	SPR-P19-XXX-COM	SPR-MXXX-BLK-H-AC
	SPR-AXXX-G-AC	SPR-MXXX-BLK
SunSpark	SST-XXXM3-60	SST-XXXM3-72
	SST-XXXM3B-60	SST-XXXM3B-72
Talesun	TP660M-XXX	TP672M-XXX
	TP660P-XXX	TP672P-XXX
Tesla	TXXXS	TXXXH
Thornova	TS-BB54(XXX)	TS-BG60(XXX)
	TS-BB60(XXX)	TS-BG72(XXX)
	TS-BG54(XXX)	
Trina	TSM-XXXDD05(II)	TSM-XXXDD06M.05(II)
	TSM-XXXDD05A.05(II)	TSM-XXXDE15H(II)
	TSM-XXXDD05A.08(II)	TSM-XXXDE15M(II)
	TSM-XXXDD05A.082(II)	TSMXXXDD05H.05(II)
	TSM-XXXPA05	TSMXXXDE06X.05(II)
	TSM-XXXPA05.05	TSMXXXDE09.05
	TSM-XXXPA05.08	TSMXXXDE15V(II)
	TSM-XXXPD05	TSMXXXDEG15VC.20(II)
	TSM-XXXPD05.002	TSMXXXDEG18MC.20(II)
	TSM-XXXPD05.05	TSM-XXXDE19
	TSM-XXXPD05.05S	TSMXXXDEG19C.20
	TSM-XXXPD05.08	TSMXXXDEG21C.20
	TSM-XXXPD05.082	TSMXXXDE09C.05
	TSM-XXXPD05.08D	TSMXXXDE09C.07
	TSM-XXXPD05.08S	TSM-XXXNE09RC.05
Ureco	FBMXXXMFG-BB	FAMXXXE7G-BB

Approved Modules

Manufacturer	Model	
Vikram Solar	SOMERA VSMHBB.60.XXX.05	PREXOS VSMDHT.60.XXX.05
	SOMERA VSMH.72.XXX.05	PREXOS VSMDHT.72.XXX.05
VSUN	VSUNXXX-144BMH-DG	VSUNXXX-108BMH
	VSUNXXX-120BMH	VSUNXXX-132BMH
Yingli	YLXXXA-29b	YLXXXP-29b
ZNShine	ZXM6-60-XXX/M	ZXM7-SH108-XXXM
	ZXM6-NH120-XXXM	ZXM7-SHLDD144-XXXM
	ZXM6-NH144-XXXM	

Approved MLPE Devices

Ultra Rail has been tested with the following Module Level Power Electronic (MLPE) devices:

The UR-40 and UR-60 mounting systems have been tested with the following UL/NRTL Listed Module Level Power Electronic (MLPE) Devices. The back plates of the MLPEs have been evaluated for bonding to UR-40 and UR-60 rail through the MLPE Attachment Kit.

AP Smart	RSD-S-PLC	
Celestica International	DG-006-F001201x	DG-006-F001401x
Delta Electronics	GPI00010105	
Enphase	C250	IQ7PLUS-72-2-US
	M215	IQ7PLUS-72-B-US
	M250	IQ8-60
	IQ6-60-2-US	IQ8PLUS-72
	IQ6PLUS-72-2-US	IQ8A-72
	IQ7-60-2-US	IQ8H-208-72
	IQ7-60-B-US	IQ8H-240-72
Generac	Optimizer model S2502	
Ginlong Technologies	Solis-RSD-1G	Solis-MLRSD-R2-1G
	Solis-MLRSD-R1-1G	
SolarEdge	P300-5NC4ARS	P505
	P320-5NC4ARS	P730
	P370-5NC4AFS	P800p
	P400-5NC4AFS	P850
	P320	P860
	P340	P950
	P370	P1100
	P400	P1101
	P401	S440
	P405	S500
	P485	
SMA	RSB-2S-US-10	
Tigo	TS4-R-F	TS4-R-S-DUO
	TS4-R-M	TS4-A-F
	TS4-R-O	TS4-A-2F
	TS4-R-S	TS4-A-O
	TS4-R-M-DUO	TS4-A-S
	TS4-R-O-DUO	

Notes:

AP Smart RSD-S-PLC, Ginlong Solis-MLRSD-R1-1G and Solis-MLRSD-R2-1G, and all Tigo models have not been investigated for bonding since the enclosures are constructed entirely of polymeric materials.
The SolarEdge P320 and P370 models are both frame mount and rail mount. All other PXXX series models are rail mount.

The SnapNrack name and SnapNrack logo are the property of SnapNrack, Inc.
All information contained in this document are the property of SnapNrack, Inc.
©2024, SnapNrack, Inc. All rights reserved.

Mechanical Loading Specifications

Functionality of these devices was not evaluated.

Not all UR-40, UR-45 and UR-60 components have been evaluated for Mechanical Loading. The following structural components have been evaluated:

UR-40 Rail, UR-45 Rail, UR-60 Rail, UR-40/UR-45/UR-60, Ultra Rail Mid Clamp, Ultra Rail End Clamp, Mid Clamp, X End Clamp, Universal End Clamp, UR-40 & UR-45 and UR-60 Splice, SpeedSeal™ Foot for UR40/UR-45/UR60, SpeedSeal™ DeckFoot for UR40/UR-45/UR60, UR-40/UR-45/UR-60 Composition Mount Kits, Standard Standoff for UR-40/UR-45/UR-60, Four Hole Standoff for UR-40/UR-45/UR-60, Heavy Duty Standoff for UR-40/UR-45/UR-60, Metal Roof Base Standoff for UR-40/UR-45/UR-60, UR-40/UR-45/UR-60 Corrugated Block, Standard Base Seam Clamp for UR-40/UR-45/UR-60, Wide Base Seam Clamp for UR-40/UR-45/UR-60, UR-40/UR-45/UR-60 Universal Tile Hook, UR-40/UR-45/UR-60 Flat Tile Hook, Flat Tile Replacement Kit for UR-40/UR-45/UR-60, S Tile Replacement Kit for UR-40/UR-45/UR-60, W Tile Replacement Kit for UR-40/UR-45/UR-60, UR-40/UR-45/UR-60 Tile Hook F, UR-40/UR-45/UR-60 Tile Hook WS, UR-40/UR-45/UR-60 Hanger Bolt Clamp, UR-40/UR-45/UR-60 Tilt Kits.

The following non-structural components have not been evaluated for mechanical loading:

Skirt Assembly, MLPE Frame Attachment Kit, MLPE Rail Attachment Kit, Smart Clips, Ground Lugs, OmniLug.

The UL Listing covers mechanical load ratings for the following span lengths, module orientations and downforce, uplift, and down-slope ratings:

Span	Orientation	Direction	Load Rating (lb/ft^2)
4 or 6 feet	Long Side or Short Side Mounting	Downforce	10
		Uplift	5
		Down-Slope	5

UR-40, UR-45 and UR-60 have been evaluated for Mechanical Loading with all UL/NRTL Listed Photovoltaic modules listed in this manual for the minimum mechanical load ratings per UL 2703.

The SnapNrack name and SnapNrack logo are the property of SnapNrack, Inc.
All information contained in this document are the property of SnapNrack, Inc.
©2024, SnapNrack, Inc. All rights reserved.